WORK

An Illustrated Journal of Practice and Theory

FOR ALL WORKMEN, PROFESSIONAL AND AMATEUR.

VOL. IV.—No. 196.] SATURDAY, DECEMBER 17, 1892. [PRICE ONE PENNY.

WORK WORLD.

THE Electric Railway from Brighton to Rottingdean will be nearly four miles in length.

* *

The present year's hop harvest shows a large diminution over that of 1891. Query, Will the brewing industry suffer in consequence, or will more chemicals be used?

* *

Some of the buildings of the Chicago Exhibition are painted by machines, which spray the paint upon the surfaces to be covered.

* *

Toy-making is an industry which ought to be fostered in England. The recent show at the Aquarium proved how much money leaves this country for articles of this description made for the most part in Germany.

* *

At the Newfoundland seal fisheries this season the capture of seals has been an unprecedented success. Three Dundee steamers alone have caught no less than 83,000 seals, of the value of £40,000. The sealskin industry this year therefore promises to be exceptionally brisk.

* *

A subterranean city has been discovered in Siberia near Karki, on the right bank of the Amu-daria. Its streets are described as regular, and laid out in a series of great caverns. A large assortment of pottery and metal-work has already been brought up.

* *

A new alloy of gold and cadmium, of definite composition (Au. Cd.), has been discovered. It is silver-grey in colour, very brittle, and exhibits a crystalline fracture. Cold acids have no action upon it, but hot nitric or hydrochloric acid dissolve out the cadmium, leaving the gold.

* *

Fluorsulphonic acid is a new acid, isolated by Professor Thorpe and Mr. Kirman, of the composition $SO_2(OH)F$, and obtained by the action of hydrofluoric acid on sulphur trioxide. It is a colourless, mobile liquid, fuming when exposed to air. It reacts with water with almost explosive violence.

* *

An alloy of silver, cadmium, and zinc has recently been tried for silver-plating by electro-depositing. This alloy is more costly than the ordinary alloy of silver and copper, but it is said to work well and show greater resistance to abrasion and less liability to tarnish than the latter.

* *

The saw is an instrument of great antiquity, its invention having been attributed to Dædalus, who, having divided a piece of wood with the jaw of a serpent, was led to imitate the teeth in iron. St. Jerome alludes to the use of a circular saw, and Pliny mentions the use of a saw in cutting building stones in ancient Belgium.

* *

Some experiments have recently been made on copper hardened by a process re-discovered by the French-Canadian blacksmith, Allard. Bullet-proof sheets of copper are reported to have been tested with eminently successful results, and it is stated that Allard has produced by his process a copper razor equal in edge and temper to the best article of the Sheffield manufacture.

* *

Steel tubes for boilers are being largely used to the displacement of copper. This movement started a few years back when a copper "ring" raised the price of that metal abnormally for a time. A $\frac{3}{4}$ in. steel tube, with a $\frac{1}{2}$ in. bore, can be drawn to sustain a pressure of 1,000 lb. per square inch; the cost is less than that for copper, and the durability is quite as great.

* *

An association has been formed in London to promote the use of anthracite coal in private houses. This coal is smokeless, it requires upright bars, and is rather more difficult to light than the softer kinds of coal. A fire-clay back to the fireplace is also necessary. When once lit the householder has a bright, clear fire, no smoke or soot, and one which makes little dust and will keep in all night, and cost no more than ordinary coal.

* *

A new fruit which has been produced is a hybrid between the gooseberry and the black-currant. The bush resembles a gooseberry bush with currant-like leaves, and the fruits are like small gooseberries in bunches of two to four on a stalk. The fruits are seedless, of the size of black-currants, coloured like a red gooseberry, and beset with fine hairs. Spines are absent. They taste like gooseberry and black-currant mixed.

A fire-damp detector, which will indicate proportions of gas in air as low as 0·1 per cent., has been designed by M. Chesnau, secretary of the French Fire-damp Company. The apparatus is in the form of a safety-lamp, burning alcohol, and the difference in brightness between the halo or ring due to the fuel and the alcohol flame is rendered more perceptible by adding a little chloride of copper to the alcohol; this tinges the flame with green, while it gives the rings a greenish-blue colour.

* *

Although platinum is found in the serpentines of Brazil and the Cordilleras, Russia has hitherto held a monopoly of that material, and the only working layers are those in the Ural. The platinum is found in beds which are frequently auriferous, and often covered with layers of peat. The annual production during the past twelve years has been about four tons. The demand has increased in late years on account of its adoption for electrical and chemical industries.

* *

In China the stones of various fruits and shells of nuts are cleaned, dried, and carved into ornaments of the most graceful kind. The stones are selected with care, and dried at such a heat as will not cause them to crack or sprout. The design is then blocked out and the kernel extracted. A second treatment now takes place to dry the interior of the stone, as well as to prevent its fine lining from decay. The designer then completes his outline, and after assistants have worked it out, puts in the finishing touches, after which the perfected carving is cleaned and polished, or oiled or waxed.

* *

It is very important that the live load on bridge floors and those in buildings should be accurately determined. It has been usual to assume 120 lb. per square foot as the maximum load for road bridges, though architects allow $1\frac{1}{2}$ cwt. per square foot as the load on the floors of public buildings. Professor Kernot has been experimenting upon this subject, filling an empty deck-house with fifty-eight Irish labourers of known weight; this showed a load of 147·4 lb. per square foot. This figure has been corroborated by other experiments, so for safety the weight of a crowd should be taken as 150 lb. per square foot.

SWEDISH WEAVING.

BY COUNTESS HAMILTON AND MISS CLIVE BAYLEY.

Looms and their Implements.

There are three principal heads under which we may class the material required in the art of weaving: First, the loom and all its various implements; secondly, the warps; thirdly, the woofs.

The looms and all materials may be obtained from Messrs. Newman, of Newman Street, Oxford Street; or Miss Dannfelt, 102, Haverstock Hill. We will first describe the loom and all that belongs to it, and will confine our attention to looms suitable for drawing-room and household weaving.

The Gobelin loom is the primitive form. It is the simplest to work and to understand, but at the same time it is the one which demands and admits of the most artistic use. Its very name suggests the tapestry which is so famous, and in which women of ancient days recorded in the earliest ages the achievements of their husbands and sons on the battle-field. It consists of a two-legged simple upright wooden frame, with two beams, and with the warp running from bottom to top.

In a later chapter we will describe the threading of the warp on to the loom and its manipulation. The only implements used with this loom are the wooden bobbins, similar in shape to those used in pillow lace making. On these bobbins the material for the woof is wound, and it is worked off them into the warp.

These looms are suitable for drawing-room occupation only, and cannot ever be really used for domestic purposes. No one but a very expert weaver could make a livelihood out of it; but from an artistic point of view nothing could be more attractive as an accomplishment, or more satisfactory in its result than this form of weaving.

For the Gobelin loom an ordinary low drawing-room chair is the most comfortable. This loom is shown (Fig. 1) as drawn by Froken Tersmeden, who has kindly illustrated this paper.

The ordinary treadle-loom, which can be used for all sorts of weaving, is a far more complicated affair. It is, however, on the other hand a far more useful machine than the Gobelin or tapestry-loom. Plain weaving, art weaving, homespuns for household or charitable purposes, ornamental or church draperies and linen, and every material in silk, cotton, or thread, can be made in this loom; and it has this advantage: that though the actual cost of production is perhaps little less than what would be paid for them ready made, the quality of hand-woven goods is always superior in strength and durability to machine-made materials.

The treadle-loom is formed thus:—(1) A square wooden frame (see A B C D), standing on four feet. It is necessarily much more cumbersome in form than an ordinary Gobelin loom. The smallest ones may, however, be placed in a drawing-room, and are both picturesque and useful objects. (2) A round wooden beam (*a*) swung on a pivot between the two back legs of the frame. On this beam the warp is wound preparatory to threading the loom. It is called the warp-beam. (3) A cogged wheel (*b*) of wood or iron regulates the winding of the warp. This is fitted with a handle, which is so placed that the weaver can reach and turn it from her seat. (4) The corresponding beam (*c*), placed a little way from the front of the frame, and also fitted with a wheel (*d*), which

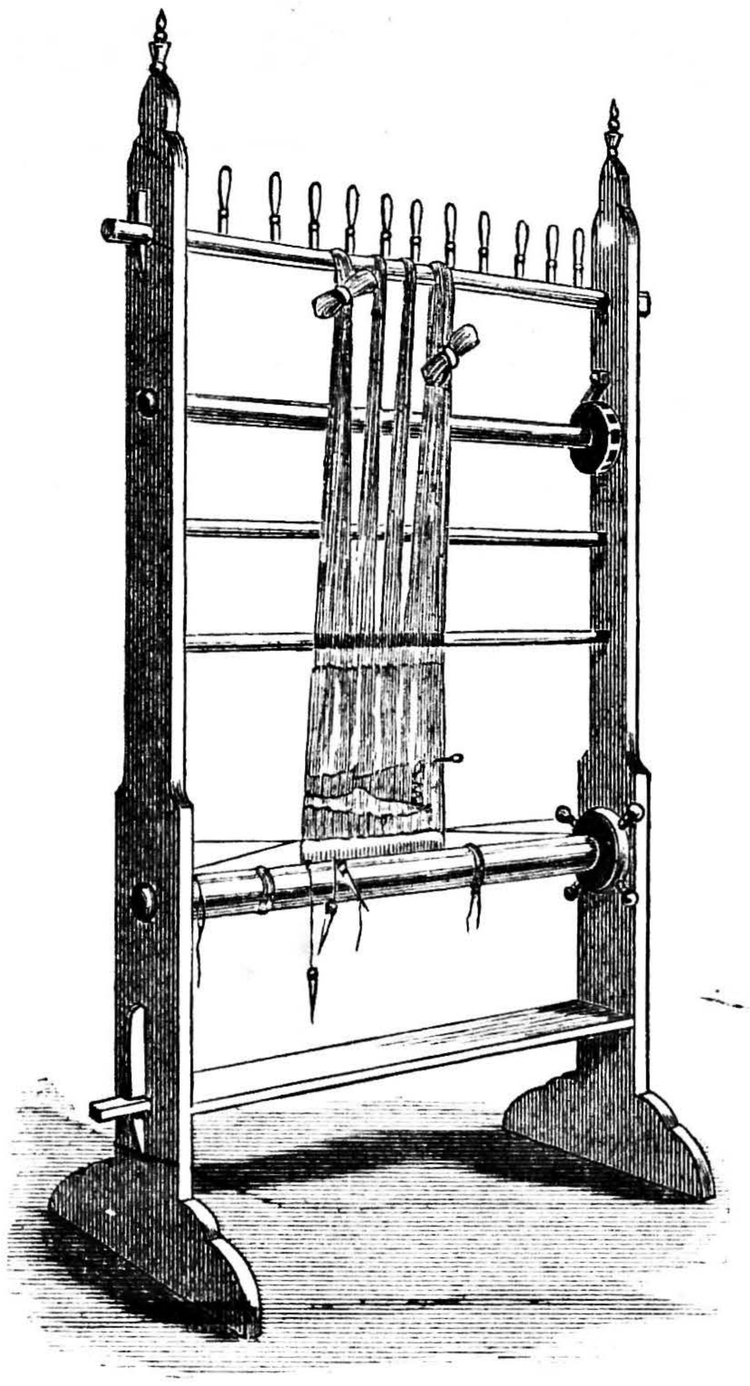

Fig. 1.—Gobelin Loom.

has several spikes, used as handles. This is the cloth-beam. The warp is, when the loom is threaded, fastened on this beam, as will be described later. Other parts are a wooden bar running across the loom, parallel with the beams, and close above the warp-beam (*a*); and another similar bar, not seen in this view of the loom. (5) The treadles, which may be any number beyond two (that number being sufficient for all plain weaving). The treadles are connected with (6) the heedle-sticks in a manner to be described later on, together with details about the heedles, not figured in this view. These heedle-sticks are again attached to (7) a flat wooden bar across the frame, and fitted with small grooved wheels, round which string loops again fasten on to pegs, which are attached to the heedle-sticks. (7*a*) Four pegs or jacks, on which to fasten the heedles. (8) The fly is composed of two flat laths and two grooved bars, of which the lowest is firm, and connects the laths. The other bar slides up and down the laths at the weaver's pleasure. Into this fly slips the reed, of which more hereafter. The fly hangs from the top of the frame by a bar across it, or stands upright from the bottom of the frame. In either case it must be towards the front of the loom, and straight before the weaver, for all the threads of the loom must pass through it. It swings on a movable pin, and is used to press together evenly the threads of the woof. (9) The chair on which the weaver sits is, in larger looms, generally affixed to the stand of the loom. (10) Several loose rods and laths used in setting the web.

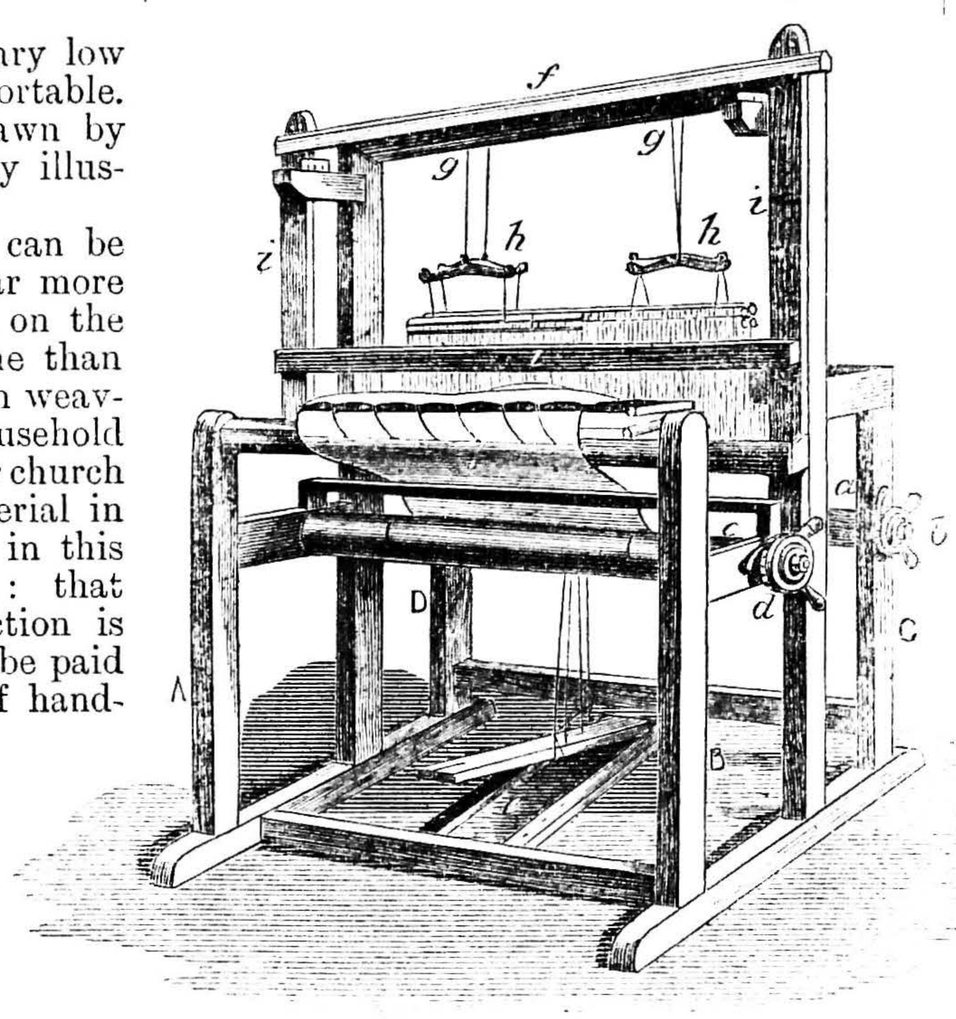

Fig. 2.—Swedish Hand-loom—A B C D, Frame; *a*, Warp-beam; *b*, Cog-wheel of Warp-beam; *c*, Cloth-beam; *d*, Cog-wheel on Cloth-beam; *e*, Treadles; *f*, Bar; *g*, Grooved Wheel; *h*, Jacks; *i*, Fly.

The implements necessary to weaving, but not generally sent with the loom unless ordered, are:—

(1) *The Reed* (Fig. 3).—This is made of steel or of wood, or of both. Generally it is a wooden frame, long and narrow, into which are fixed thin bars of steel. It fits, as we have said, into the fly, and through the interstices between its bars all the threads of the warp must pass. Therefore it is necessary, in ordering a loom, to order at the same time several sizes of reeds, for the meshes required will vary according to the material used.

(2) *The Shuttle* (Fig. 4).—This is made of wood, and is in shape somewhat like a boat. It is one of the more difficult models used in the wood *slöjd*, as it is difficult to produce accurately the double curve, which is both graceful and also necessary for the swift throwing of the shuttle. The centre of the shuttle is a deep well. A little bit of ivory is often fitted at either end of the hollow; and at the right end, when the shuttle is held as here pictured, a little spring allows a pin to be fitted in, on which the bobbin is placed. There is always a round hole in the side of the well of the shuttle, through which the thread off the bobbin is passed, and this hole must always be held towards the weaver. The ends of the shuttle are tipped with metal, so as to pass through the web without catching. The weaver makes her own bobbins (J) out of ordinary paper (note-paper or brown paper is used for the purpose). The weaver generally has a bobbin machine with her loom (Fig. 5).

(3) *The Tenter* (Figs. 6 and 6A).—This instrument is used for stretching the material in weaving, and to prevent its width contracting. Its action explains the meaning of the expression, "Kept on tenterhooks." It consists of two separate pieces, of the shape to be shown later on. They are tipped with brass at their broad ends, and are also spiked, so as to fasten into the web. When in use they are tied together with string, which is passed through the holes of the lower piece and between the wooden teeth of the upper one. There are several holes in the one, and several teeth in the other, and the weaver can regulate the width required by altering the position of the string.

The tenter is kept firm by a small brass catch.

(4) *Warp-laths.* — Several laths, about $1\frac{1}{2}$ in. broad and $\frac{1}{2}$ yard long, tipped at one end with block of wood 1 in. high. These are all the implements necessary if the loom is bought, as may be done, with the warp ready wound; but if the weaver makes her own warp the following apparatus is necessary:—

(1) *Bobbins.*—These may be either wooden ones—in which case they are like two or sometimes three long wooden frames, placed one inside the other; they may be about 18 in. high and about 1 yard in circumference—or they may be made like those used in the shuttle (of paper), only much larger, the whole length, in fact, of the winding-pin, and thicker in proportion.

(2) *A Winder* is also useful, but it may be dispensed with if the weaver can employ a friend to hold the skein, as for knitting. When the skein is wound off the winder on to the bobbins (the wooden bobbins can hold as many skeins as necessary, but paper ones naturally only take, at the most, one skein), the bobbins are ready for use.

(3) *The Winding-stand.*—In any case these bobbins must be placed on a winding-pin. The "shuttle bobbin-winder" (Fig. 5) comes in useful again for these warp paper bobbins, but for the wooden bobbins a stand with an axle and handle is necessary for winder.

(4) *The Bobbin* T.—This takes the place of the ceiling in a peasant's cottage. It is usual in cottages to fasten iron loops into the ceiling, and the warp from each bobbin is passed through one loop. The T is just a T-shaped stand, raised on a firm foot, and fitted with similar iron eyelet-holes. There are several eyelet-holes in the T, and you can, if you like, use as many bobbins as there are holes. The warp-winder sits by the T, and holds in her hands all the threads. Woman is often pictured as holding in her hands the threads of destiny. She here holds in her hands all the threads which run up to the warper.

(5) *The Warper.*—This is formed by a cubical frame bobbin, exactly like the one already described, only on a much larger scale. It is fitted with an upright axle, on which the bobbin is turned by the weaver with her hand. It has fixed wooden pegs, round which the threads held by the warp-winder are tied. The warper, when not required, can be folded together; otherwise it occupies too much space.

These are all the instruments or implements required for plain weaving, and these descriptions apply to all looms for hand weaving; for however different in size, and occasionally in the details of construction they may look, the general principle of construction is the same as is here given.

Implements not absolutely necessary, but convenient to have for weaving:—

(6) *The Reed Hook* (Fig. 9).—This can be made of wood or ivory. It should be a very thin, flat instrument, with a crook at the end of it, and will be illustrated later on. Its use is to pull the warp through the meshes of the reed when the warp is being threaded.

(7) *Shade-sticks.*—Thin pieces of wood, about 1 in. wide and as long as the loom is broad. They are used to keep the warp-threads in their places—by no means an easy task without them.

(8) *The Heedles.*—It is possible to make these latter, and they are hardly to be called implements. There are, it is true, stocks on which these heedles can be made, and a good weaver ought of course to know how to make them; but it is as unnecessary to make them as to carve your own shuttle in *slöjd* woodwork. They should be ordered ready-made with each loom. They cost a few pence for every hundred, and 2,000 of them are the allowance to every loom, as the finest web seldom has more threads than this, each heedle holding a thread. The heedle itself is generally made of coarse cotton, and consists of three loops. Into the top and lowest loop passes a heedle-stick; through the small loop in the centre passes the warp before it goes into the mesh of the reed. The necessity for the heedles all to be even in length is obvious; otherwise the threads would all pass through at uneven heights, and the whole web be in confusion.

The heedle and the stock for making it is shown in Fig. 8. Should the weaver aspire to make her own, the only rule beside that of perfect evenness is to tie the knots of the heedle so that the knots should not slide.

The implements used for art weaving are shade-blades (two or three in number). They must be as long as the loom is broad, and about 4 in. wide, and either rounded or pointed at the ends, so as to divide the threads and pass easily between them.

For Opphemta some thirty or forty very light sticks are wanted, round or flat—bamboos are very suitable, as they are light and strong. For this purpose the sticks must be very firm. These sticks are required for the first method of weaving Opphemta, suitable for small looms and for amateur weavers with whom time is not an object.

Opphemta, however, can be much more easily and quickly managed with an entirely separate apparatus, which must be fixed with screws to the top of the loom, and which requires rather a larger loom, and is therefore better adapted to business establishments, where there is more space and a greater need for despatch. It consists (as will be seen in the chapter on that style of weaving) of frames fitted with reels and grooved wheels, connected together by strings coming up from the heedle-sticks, and these latter are brought forward and attached to little handles, which are within easy reach of the weavers. The number of the handles, of the grooved wheels, of the reels, and of the extra heedle-sticks (which must also be prepared for this work) must all be the same, and certainly not less than twenty should be provided; or, to speak more correctly, twenty pairs of heedle-sticks, for there are always two heedle-sticks for each set of heedles.

The number of heedle-sticks, reels, wheels, and handles in use at any one time depends upon the pattern of Opphemta woven.

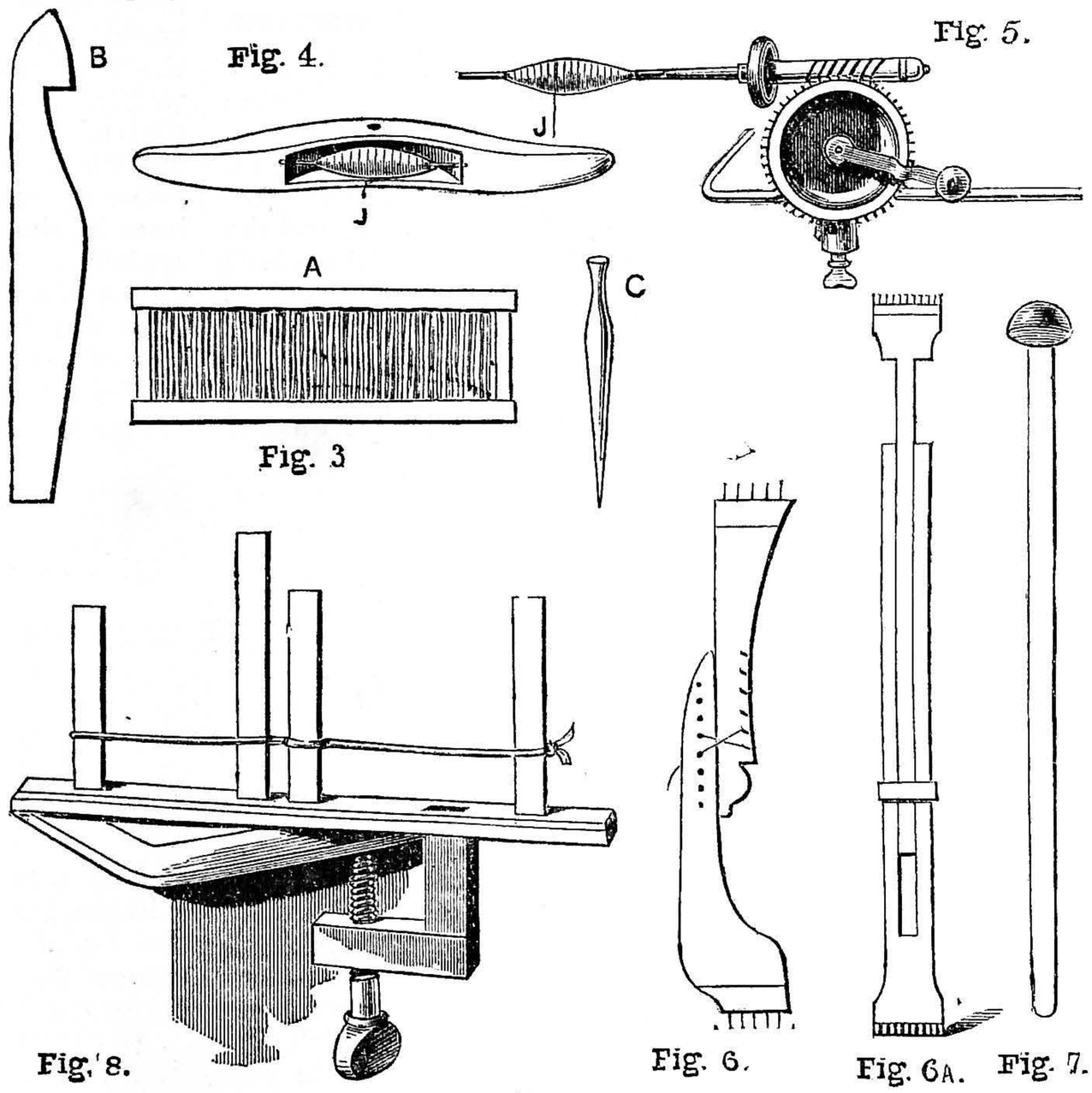

Swedish Weaving. Fig. 3.—Reed. Fig. 4.—Shuttle and Bobbin. Fig. 5.—Bobbin Machine. Figs. 6 and 6A.—Different kinds of Tenters. Fig. 7.—Warp-lath. Fig. 8.—Heedle and Stock.

LOCOMOTIVE SMOKE CONSUMERS.

The Pennsylvania railway lines are fitting to their locomotives a smoke-preventing device which might well be adopted on London systems. The fire-boxes are fitted with the usual steam-jet entering both the front and rear, but instead of carrying air in with the jet which is taken from the atmosphere, pipes are carried to the ash-pan, and the air taken from directly beneath the grates. The object of this is to avoid carrying comparatively cold air directly into the fire-box, which must detract to some extent from the heat of the box. This will also lessen any tendency which the air might have to condense the steam and produce moisture in the fire-box. A blower is placed in the smoke-stack to operate in connection with the arrangement, the opening of one valve in the cab throwing them both into operation. It is the intention to use this attachment only within the city limits, where the smoke produced is a nuisance, and for this reason it is not made automatic, but is thrown in and out of operation by the use of a globe valve. The device has been carefully tested, and appears to be effective in preventing the emission of heavy black smoke, and the engines are all being equipped with it as fast as practicable. If only this or some better system could be employed upon our underground railway lines, travelling upon these routes would be much more pleasant.

NEW DEPARTURE IN PHOTOGRAPHIC LENSES.

A PHOTOGRAPH of Mont Blanc, taken from a distance of fifty-six miles, is calculated to excite the wonder and curiosity of photographers in no small degree. Hitherto, except in one or two cases which we need not consider, it has always been assumed that to obtain on the focussing screen an image larger than another necessitated the use of a longer focus lens and a longer extension of the camera; in fact, that the size of the image was proportional to the focal length of the lens. That this need not always be the case is shown by the introduction by Mr. Dallmeyer, at the close of 1891, of the tele-photographic lens, a rough account of the principles of which we propose to give.

If we consider the diagrams given below, which represent a beam of rays being brought to a focus on a plate, first by means of an ordinary, and secondly by means of the new lens, it will be seen that the parallel rays (R, R, Fig. 1), for example, passing through the lens (A, Fig. 1) undergo refraction and become convergent, and upon the amount of this refraction depends the focal length of the lens, and consequently the size of the image. But in the case of the second diagram, which illustrates the principle of the tele-photographic lens, in which, between A and the plate, *p l*, there has been inserted a negative lens, B, the effect of which is to cause the rays which have passed through A to become less convergent, the result obtained, as far as the size of the image is concerned, is the same as would be got by the employment of an ordinary lens in the position shown by the dotted lines (Fig. 2).

To use the new lens, the camera is racked out until the focussing screen is in the position which it is thought best it should occupy, and the focussing is done by varying the distance between the positive and negative lenses. This is the method recommended by Mr. Dallmeyer himself, who has pointed out that under certain circumstances it becomes absolutely necessary; as, for instance, in the case shown diagrammatically below (Fig. 3). Here it is supposed the camera has been focussed for parallel rays; if then it is attempted to focus for a near object, as shown by the dotted line, it will be found impossible by any variation of the position of the focussing screen, since the rays will leave the negative lens diverging. By increasing the distance between the positive and negative lenses however, it will be seen that the near object can be focussed without any movement of the plate.

It should be borne in mind also that the effect of the introduction of the negative lens being to give the positive lens an imaginary position at a considerable distance outside the camera, as shown in Fig. 2, in estimating the rapidity the focal length must be measured from this imaginary position, and it is consequently advisable to employ as rapid a lens as possible for the front or positive part of the combination, or very long exposures will be necessary. It is found in practice that the front lens may be any ordinary photographic objective of large aperture, the "portrait" type being preferable.

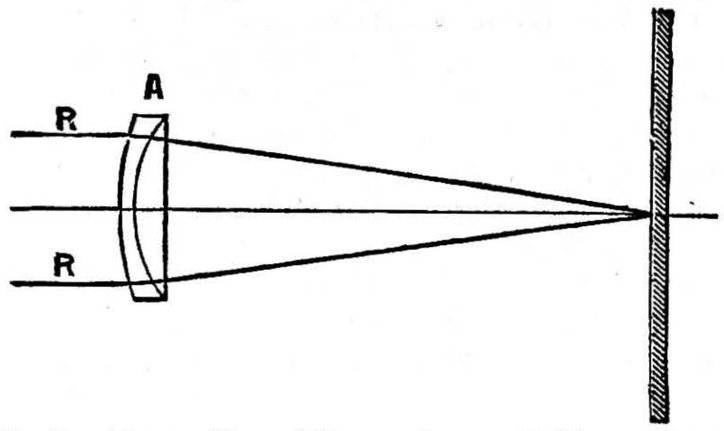

Fig. 1.—Formation of Image by an Ordinary Lens.

We have seen very presentable photographs taken with an ordinary Petzval portrait lens, by interposing between it and the plate the back lens of an opera-glass, which was fitted in a cardboard tube attached to the inside of the front of the camera, the focussing being done with the rack and pinion of the portrait lens; but this form of instrument is not as satisfactory as might be wished, any slight optical defect being exaggerated in proportion to the size of the image chosen. Mr. Dallmeyer has constructed, however, a series of negative combinations which can be employed with his rapid short focus portrait lenses, which the introduction of the modern dry plate has, until now, rendered to a certain extent useless.

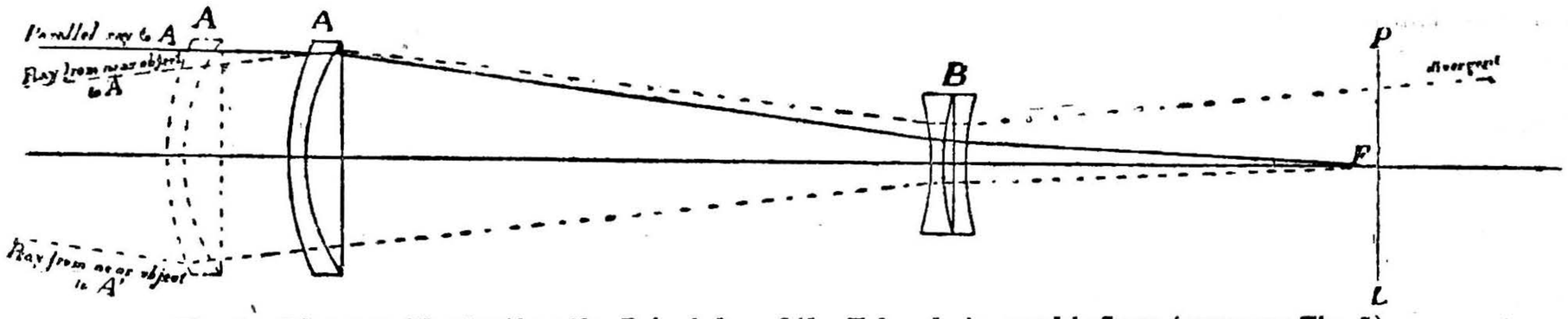

Fig. 2.—Diagram illustrating the Principles of the Tele-photographic Lens (compare Fig. 1).

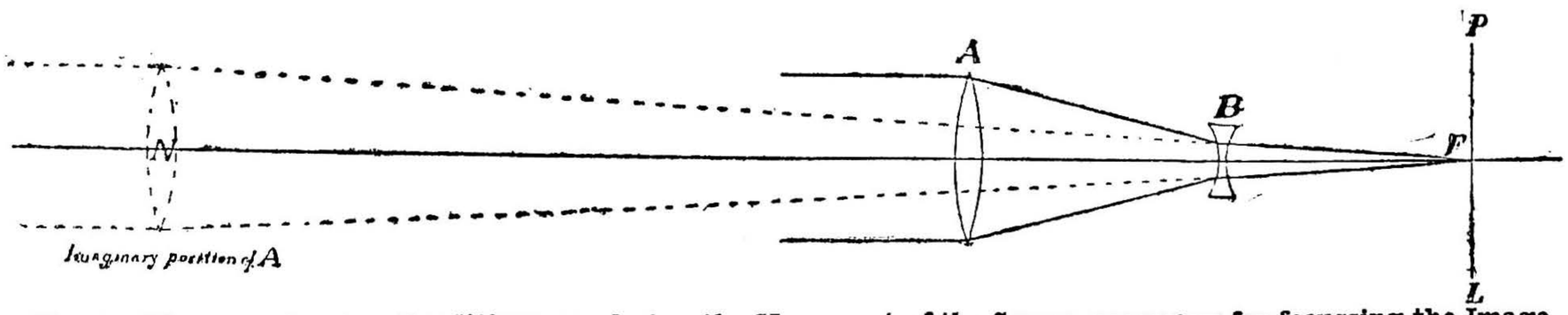

Fig. 3.—Diagram showing Conditions rendering the Movement of the Screen necessary for focussing the Image formed by Tele-photographic Lenses.

TICKET CEMENT.—A cement to stick tickets on ironwork and tin, that will stand water, can be made by mixing a little rye meal with a solution of glue and water and a little Venetian turpentine, but the cement must not be made too thick. If too thick, thin with the Venetian turpentine.

A FINE blue tint can be produced upon polished steel articles by placing them in a shallow tray filled with dry common lime, and heating them until they become the colour required, after which leave them to cool of their own accord. This recipe should prove useful to many correspondents who have inquired for a steel tint.

CHEMICAL APPARATUS: HOW TO MAKE AND USE IT.

BY H. B. STOCKS.

SYPHONING OF LIQUIDS—SYPHONS MADE FROM GLASS TUBE—METHOD OF POURING LIQUIDS—GLASS RODS: METHOD OF MAKING—AUTOMATIC FILTRATION AND WASHING—WASH-BOTTLE: HOW MADE AND USED—SUPPORTS FOR TEST-TUBES—HOW TO HOLD TEST-TUBE—WIRE SUPPORT FOR TUBE—TINPLATE CLIP FOR TUBES—TEST-TUBE STAND—CLEANING TUBES AND APPARATUS—TEST-TUBE BRUSH—TEST-TUBE CLEANER—BULB-TUBES: HOW MADE AND USED—WIRE HOLDERS FOR CANDLES FOR DETERMINING PROPERTIES OF GASES.

IN my last paper I pointed out the methods used by chemists for the filtration of liquids containing solid matters suspended.

Now, in the case of liquids containing solid matter which subsides on standing, the clear liquid may be syphoned from the vessel, thus avoiding filtration, except for the last small quantity. The syphon shown at Fig. 1 is a simple bent glass tube, one limb of which is longer than the other. The syphon is filled with water, and, keeping a finger on each end, inverted with the short limb in the liquid which it is intended to syphon away. A small piece of rubber tube and a pinch-cock placed upon the longer limb will be convenient for regulating the flow of the liquid.

The syphon seen at Fig. 2 can be readily made, and will be found very useful. It consists of a piece of glass tube, ½ in. in diameter, 4 in. long, one end being drawn to a point. In the other end two tubes, A and B, are placed, and sealed with cement, the end of A being longer than B. By placing A in the liquid, and sucking at B, a little of the liquid is sucked over, and this commences the work of the syphon. This will do for corrosive liquids.

At Fig. 3 is seen the method of pouring a liquid on to a filter, or from one vessel to another, by means of a glass rod. The vessel containing the liquid is slightly greased on its outside edge at the place it is intended to pour from; a glass rod is then held against the edge of the vessel and over the filter-paper. The liquid then flows down the glass rod, even though it may be considerably inclined, and not a drop is lost. This is an essential point in analysis.

Glass rod may be bought in lengths of various thicknesses at 1s. to 1s. 2d. per pound. For stirrers, it is cut into convenient lengths, 2 in., 4 in., or 6 in., according to the purpose they are intended for, and each stirrer has the ends rounded off by holding them in the blowpipe flame for a few seconds. Rods for dropping purposes are drawn out to a fine point (Fig. 4, *b*), two being made at the same time, and the points held in the flame so as just to fuse them.

Fig. 4, *c*, shows a rod with one end flattened for holding. This form may be made by heating the end in the blowpipe until a mass of pasty glass forms, then bringing it straight down upon a piece of smooth iron, and rapidly removing it as soon as it is flattened.

Automatic filtration and washing of precipitates may be carried out in the apparatus shown at Fig. 5, which is simply a flask intended to hold the liquid, a well-fitting cork, and two straight tubes, one reaching to the bottom of the flask, the other merely reaching through the cork. If the apparatus is arranged so that the tubes are covered with the liquid before the filter is full, no liquid will pass on to the filter-paper until the tubes are exposed, when air will pass up the longer tube and allow some of the liquid to escape. Thus the tubes are again covered, and this process goes on until the flask is emptied of its contents.

A useful piece of apparatus for washing precipitates is called the "wash-bottle." It is seen at Fig. 6. The flask may be about 20-oz. size. Two tubes are required, bent as shown. The longer one reaches to the bottom of the flask, and outside the flask is attached to it a fine-pointed tube by means of rubber tube; the second tube merely reaches through the cork, and by blowing through this a fine jet of water is shot out of the capillary tube. In some cases hot water is used for washing precipitates, and for this purpose the flask may be kept heated. If cold water only is required, then a bottle may be used instead of a flask.

It will be convenient at this place to mention the supports that are used for test-tubes. Supports for holding test-tubes in the hand are made, but they are seldom used except by amateurs, who are afraid of burning their fingers. Get your fingers hardened to the work, or apparatus will be broken by letting it fall when it becomes too hot to hold.

When boiling a liquid in a test-tube, hold it in the direction shown at Fig. 7—never straight, and never have it more than half full of liquid. Shake the tube slightly all the time it is being heated; otherwise, when the liquid boils some of it will be spurted out, and perhaps scald your hand. Never allow the flame to play above the surface of the liquid; and if there is solid matter present as well as liquid, shake it well up, or it will settle, and the tube will crack. If these instructions are adhered to, you will not feel the heat of the tube, even though it is held in the fingers; but if a continued boiling is kept up, then the tube will become hot, owing to the escaping steam. Then fold a piece of brown paper three or four times, so as to make a band about 1 in. wide, wrap it round the neck of the test-tube, and grip the two ends, so as to hold the tube. No inconvenience will then be suffered from the heat.

The wire support shown at Fig. 8, attached to a retort-stand, may also be used for holding test-tubes. It may be readily made from stout wire, as I explained for making rings for the retort-stand.

Fig. 9 shows another form of holder for test-tubes, also adaptable to a retort-stand. It consists of two tubes of tinplate, soldered together at right angles. In each is placed a cork—the one with a hole bored to take the retort-stand, the other has a slit cut in it, so as to hold the tinplate or brass clip for the tubes. The clip itself consists of two pieces of tinplate or thin sheet-brass, 6 in. long and ¾ in. diameter, the ends of which are curved, so as to fit to the shape of the tube. They are bent outwards a little, so as to give them a spring, and are then fastened together by means of a flattened ring made of the same material. By sliding this ring, the jaws of the clip are brought together or unclosed, as required.

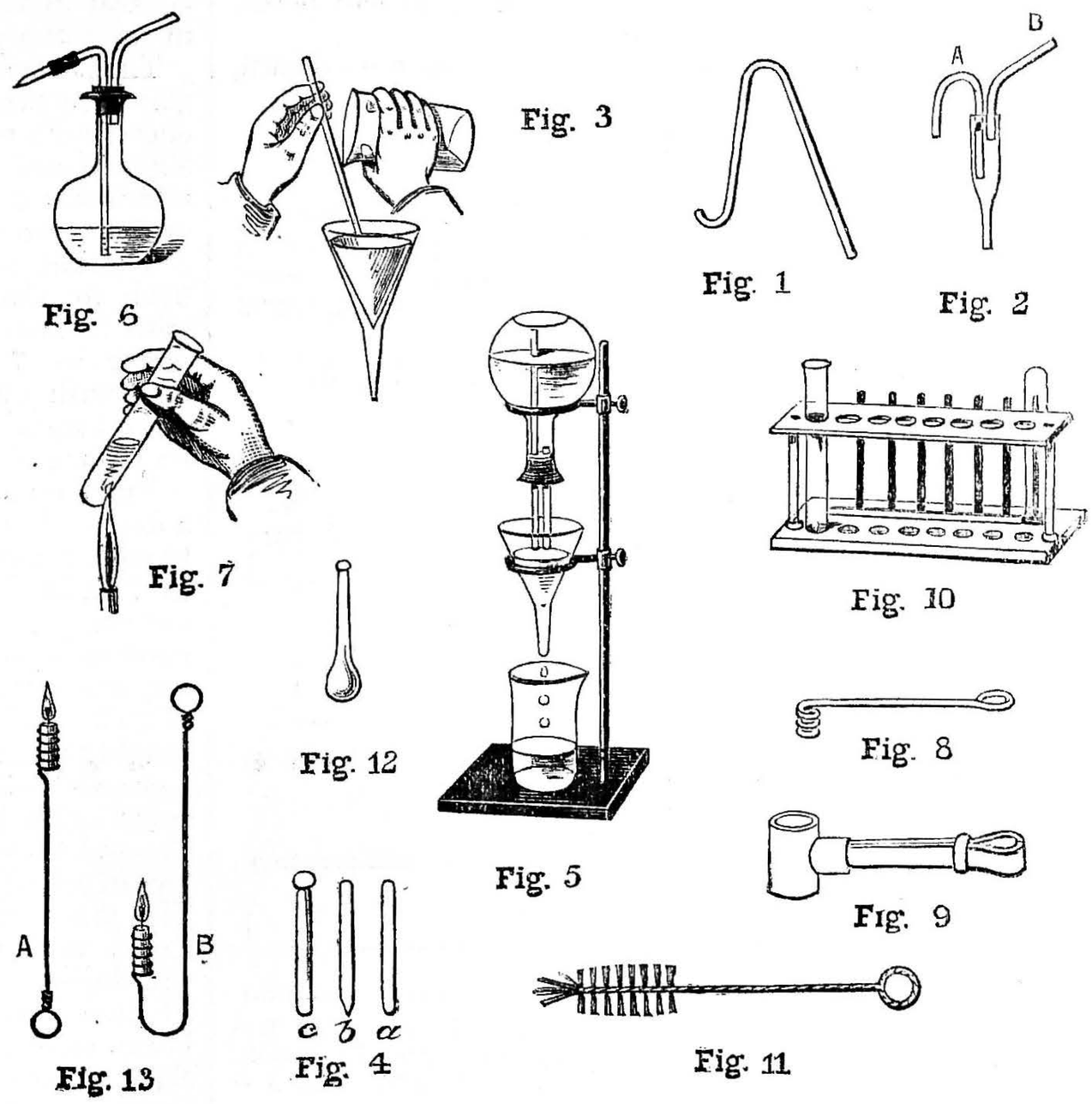

Chemical Apparatus. Fig. 1.—Syphon. Fig. 2.—Syphon for Acids. Fig. 3.—Method of pouring Liquids. Fig. 4.—Glass Rods. Fig. 5.—Automatic Filtration and Washing Apparatus. Fig. 6.—Wash-bottle. Fig. 7.—Method of holding Test-tube. Figs. 8 and 9.—Test-tube Holders. Fig. 10.—Test-tube Stand. Fig. 11.—Test-tube Brush. Fig. 12.—Bulb-tube. Fig. 13.—Wire Candle-holders.

For supporting a number of test-tubes when not in use, the wooden stand (Fig. 10), called a test-tube stand, will be found useful. A stand of this description may be made by anyone who can work with a few tools. The upper piece of wood has holes bored clean through, large enough to take the test-tubes, and corresponding holes are scooped out in the lower piece for the bottoms of the tubes to rest in. If a row of pegs are added to the stand, and a strip of wood tacked on so as to incline the tubes a little, the tubes may be left to drain and dry after washing them out, and, being upside down, will be kept free of dust until required.

Those who do not wish to go to the trouble of making a wooden stand may make a good substitute in the following manner: Choose a box made of thick cardboard or of wood, such as a cigar-box, and bore holes in the lid large enough to take the tubes. A cigar-box would take one dozen test-tubes in two rows of six each. Get a piece of thick cardboard of the width of the box inside, and 2 in. longer, bore holes in this corresponding with those in the lid of the box, bend 1 in. down at each end, and place the card in the bottom of the box. This will hold the tubes in position, and not allow them to move in a lateral direction, so as to fall through the lid of the box.

After using test-tubes, they should always be cleaned before being put away. There are very few chemists who follow this rule, and I am not one of them; but the test-tubes, or any other pieces of apparatus, are easier to clean immediately after use than after they have been standing some time, so that, if time will permit, it is the easiest plan.

There will be found no difficulty in cleaning out apparatus with cold water alone, but any gas apparatus should be allowed to cool down before being cleaned. If any material sticks to the sides of the apparatus, a little sand and water and vigorous shaking will generally fetch it off. By no means use soap, especially if acids have been used, or you will get a greasy mass; and unless oils or fats have been used in the experiment, soap is of no use in cleaning. If there is a deposit upon the sides of the apparatus, hydrochloric acid will probably fetch it off; if not, leave it on—it is of no consequence.

In cleaning test-tubes, the test-tube brush (Fig. 11) is used, but after using a few times the bristles at the end come out, leaving the wire bare. Then, next time you use it, you forget this, and push the brush right to the bottom of the tube, when—pop!—out goes the bottom of your test-tube. I have done it many a time, so I have had plenty of experience.

To obviate this, a round stick with a piece of tow on the end will do, but the neatest thing in this line was invented by a laboratory boy I know.

A round stick, about 12 in. long, has a piece of india-rubber tube, 2 in. long, drawn on to it, leaving a little off the end, so as to form a soft pad when it reaches the bottom of the tube. For small tubes, a piece of ⅜ in. grey rubber tube will do, and for larger tubes a piece of wider rubber tube may be drawn over this.

Bulb-tubes (Fig. 12) are for the purpose of heating substances, to see what changes occur. They are very often used in the qualitative analysis of mineral substances. They are made from glass tube of about ¼ in. internal diameter. They are sealed up at one end by holding in the blowpipe flame, and when a lump of pasty glass is formed, a small bulb is blown upon the ends of them. As an example of the use they may be put to, if a little mercuric oxide is placed in the bulb and heated, a gas is given off which re-lights a match that is only glowing, and, on examining the tube, a mirror consisting of innumerable minute globules of mercury is seen. This experiment shows that mercuric oxide, on heating, splits up

into its two elements—mercury and oxygen. Wire holders for candles (Fig. 13) will be found useful when trying the effect of various gases upon burning bodies. A small candle may be placed in the cage of A, and pushed up into a jar of hydrogen. The hydrogen takes fire at the mouth of the jar; but if the candle is pushed up into the jar, the flame of the candle is extinguished, showing that hydrogen burns in contact with air, but the gas is not a supporter of combustion. If a candle is placed in B, and lowered into a jar of carbonic acid, the candle goes out, showing that carbonic acid does not support combustion; or if the candle is placed in a jar of air, and carbonic acid is poured upon it from a jar containing the gas, the candle will go out. If in this experiment a little of the smoke from burning brown paper be mixed with the gas, by dipping the burning paper in the jar and shaking up, the flow of the gas may be seen when poured, just as though it were a liquid. This experiment shows the weight of the gas.

HUNG SASHES ALTERED TO PIVOT LIGHTS.

BY B. A. BAXTER.

In answer to a subscriber who asks for a method of making the ordinary sash windows more easy to clean and less dangerous to the window-cleaner, these hints are offered as an endeavour to overcome the difficulty.

There have been patented methods, none of which I shall copy knowingly, as the only one of which I have seen the details does not appear suitable for existing windows.

Let the reader, then, imagine an ordinary sash window, and let the stiles be cut down just inside the ⅝ in. bead, the cut portion being fixed by a pivot to the remainder of the stile. It is easy to see that the sash (in this case the lower one) could be swung on the centre like a pivot sash. At the same time, two defects will be seen to exist in such an arrangement—first, the liabilty to draught; and next, the danger of the pivots being moved from their horizontal position while the sash is moved on the pivots. The first difficulty may, I think, be overcome by making the sliding pieces with narrow stops, like the beads of pivot sashes, but smaller; the other difficulty may be overcome by having a fastening as drawn in Fig. 4.

If, however, the sash is to be capable of being turned a half revolution, or nearly so, then the beads will come in contact, so that if beads or their equivalents are fixed, then the sash will revolve only about a quarter of a turn, or the vertical surface of the glass become horizontal, or thereabouts. Therefore, in sashes of more than 6 ft. in height, the stops or beads must be abandoned; for it is not convenient to have to reach more than 3 ft. from the bottom of sash. Although it is possible to alter both the sashes in this way, I think it inadvisable; for if the top sash is on pivots it will, if moved on the centres before being drawn down, come in contact with blinds and curtains, and require the blind to be fixed outside the sash frame and above the ⅝ in. bead, which is not always desirable. If, therefore, it is important to have the sash movable on the pivots to the full extent, the beads, or their equivalents, may well give place to an additional moulding, which is drawn as an ovolo, but this ovolo will have to be removed from each bead whenever the window is to be turned on the pivots. It is quite possible to make the upper sash turn in a similar way, but the added moulding just mentioned will not be applicable.

In order to prevent the sash pivots being put out of square by accident when the frames are being turned, some fastener ought to be provided; and the fastener shown will probably do well. It will be fixed to the sliding piece, to which also the sash-line is fixed, and when in one position the sash and slider will be fixed together by it; in the other position it will fix the slider to the sash frame. Small mortises will be required for this purpose at appropriate places on the inner surface of sash frame, just behind the bead. Perhaps it may be useful to have more than one pair of mortises for each pair of fasteners. The fasteners will have to be made to order, and they will be right and left. The hanging of the sashes will require care, and the cords had better be fixed with screws.

The pivots ought to be made as drawn,

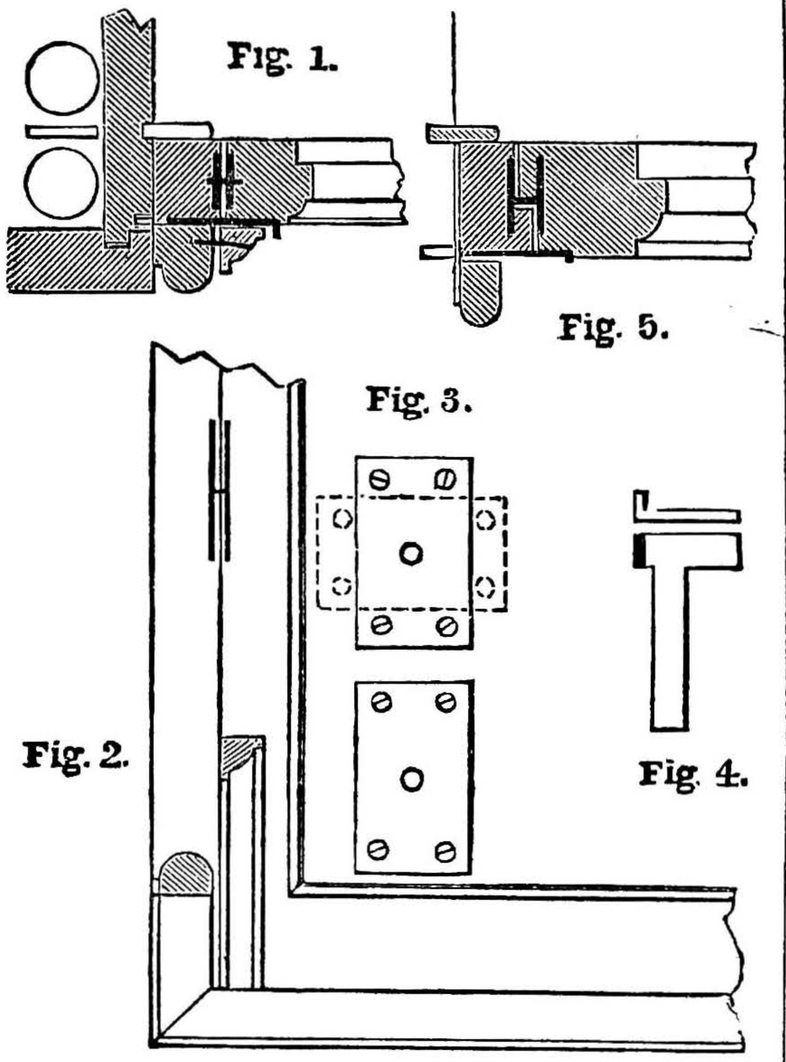

Hung Sashes altered to Pivot Lights. Fig. 1.—Sectional Plan. Fig. 2.—Part Elevation. Fig. 3.—Pivots. Fig. 4.—Fastener. Fig. 5.—Alternative to Fig. 1.

two similar plates with screw-holes in position shown and riveted together. The fastener must be cut into the sliders so that it will move, as a button, as far as needed to fix sash, or to enter the small mortises prepared in the edge of frame.

It is almost unnecessary to say that the movement is intended to be outwards at the bottom of each sash, and inwards at the top.

HAND-WORKING OF SPECULA FOR THE NEWTONIAN TELESCOPE.

BY EDWARD A. FRANCIS.

THE SMALL FLAT MIRROR—THE TEST-TUBE AND CELL—EYE-PIECES—THE FINDER—ADJUSTMENT OF THE MIRRORS.

OTHER methods of testing than the shadow-test require that the speculum shall be placed in some kind of test-tube, furnished with a small flat mirror and an eye-piece; and this apparatus is practically a complete Newtonian telescope.

In Fig. 2 the light rays reflected by the great speculum are intercepted and turned aside by a small flat mirror. This small mirror, like the larger one, is made of polished plate-glass. By obtaining three 5 in. discs of ¼ in. polished plate-glass, and working them alternately together with the finest grades of elutriated emery, three optically flat surfaces may be secured, two of which may be polished on a quite flat facetted polisher of hard pitch based on the third. From the polished discs several ovals may be cut, and the best selected.

I do not think it advisable that an inexperienced workman should attempt at first a flat surface. A small mirror may be purchased, or an oval may be cut direct from a piece of good commercial plate (from part of an old looking-glass, for example), which will possibly be more perfect than any first optical flat. It is difficult to polish with success a small plane surface. For those, however, who may choose the task, the directions given, together with the general knowledge of glass working gained in speculum polishing, will prove sufficient.*

The surfaces of commercial polished plate-glass are prepared very carefully by experienced craftsmen, and I have experimentally silvered and tested odd pieces of ¼ in. plate, and found them sufficiently satisfactory for ordinary work with a large reflector.

The flat must be about ¼ in. thick, and oval in shape (for an obvious reason), with its major diameter to its minor diameter as 7 is to 5. In our special case, with a 5½ in. concave speculum of 5 ft. focal length, the actual measurements will be 1¾ in. and 1¼ in.

First, roughly cut the glass to shape with a diamond and pincers; then, if it be desired to edge it neatly, prepare a rod of wood, 6 in. or 7 in. in length, and 1¼ in. in diametrical section. Near to the middle of the rod mark off two rings exactly 1¼ in. apart, and cut across with a tenon-saw slantwise from one ring to the other. Then cement the roughly trimmed oval between the cut surfaces, so that the joined portions of the rod carrying the glass will run true in the lathe. Proceed then as when edging the speculum, but, of course, on a much more delicate scale. The glass will need to be reduced to the thickness of the rod. Fig. 31 is a sketch of the finished flat (exact size), which should fit truly into a piece of mandrel drawn brass tubing of 1¼ in. internal diameter. Such a piece of tubing, about 3 in. in length, should be prepared as in Fig. 32, the three little projecting pieces being soldered from the outside, and bent over to prevent the glass from falling out. The inside of the tube must be left smooth and circular.

Fig. 33 shows the flat mounted (in section), the glass oval, A (within C), being secured by B. The rest of the drawing is self-explanatory. The flat is, of course, silvered before being used; and to preserve the silver film a deep cap may be made to slide over C.

The movements necessary for adjustment are supplied by the sliding of B within D, and the raising or lowering of F within G. There should be no shake in any of the parts. The arrangement is not that which would be used by choice with a cylindrical tube, but was designed and constructed for use with a large wooden tube specially made for lunar photography. The carpentering of the wooden test-tube is elementary, and the sketches furnish the instruction needed.

Fig. 34 shows the exterior of the tube, which is bound by four metal bands. The band at D is stout, because that end of the tube may rest on the ground.

Fig. 35 is a plan with dimensions: A is

* I will describe the test for flat surfaces when it is needed.

the concave speculum, B the small flat mirror, C the eye-piece.

The method of mounting the speculum in a wooden cell is shown in Figs. 36, 37, and 38. The cell should be very carefully made of ½ in. well-seasoned wood, and should be of such dimensions as to easily and accurately slide within the great tube (see Fig. 39), where it is secured by means of the screws, A and B. The speculum is adjusted, when in position, by means of the three blunt thumb-screws, C, D, E, which should ends may often be adapted, by a little ingenuity, to supply the place of costly mechanism for experimental purposes. Pieces of optical brass tubing that slide accurately the one within the other should be jealously preserved.

The little telescope, B (Fig. 33), is made of one short brass tube, and has placed in the focus of its Ramsden eye-piece two crossed wires. It is mounted in rings, each pierced with three screws, as in Fig. 41; and so it is possible to adjust it that any object in the description of the Ramsden eye-piece be strictly followed, there will be little risk of error. An eye-piece by a good maker costs from seven or eight shillings to a guinea.*

The mirrors when in the tube are adjusted as follows: Turn the mouth of the tube towards the open sky or any source of diffused light. Remove the eye-piece. The oval of the flat seen through the eye-tube should appear a perfect *circle*, concentric with the eye-tube, and adjustment should

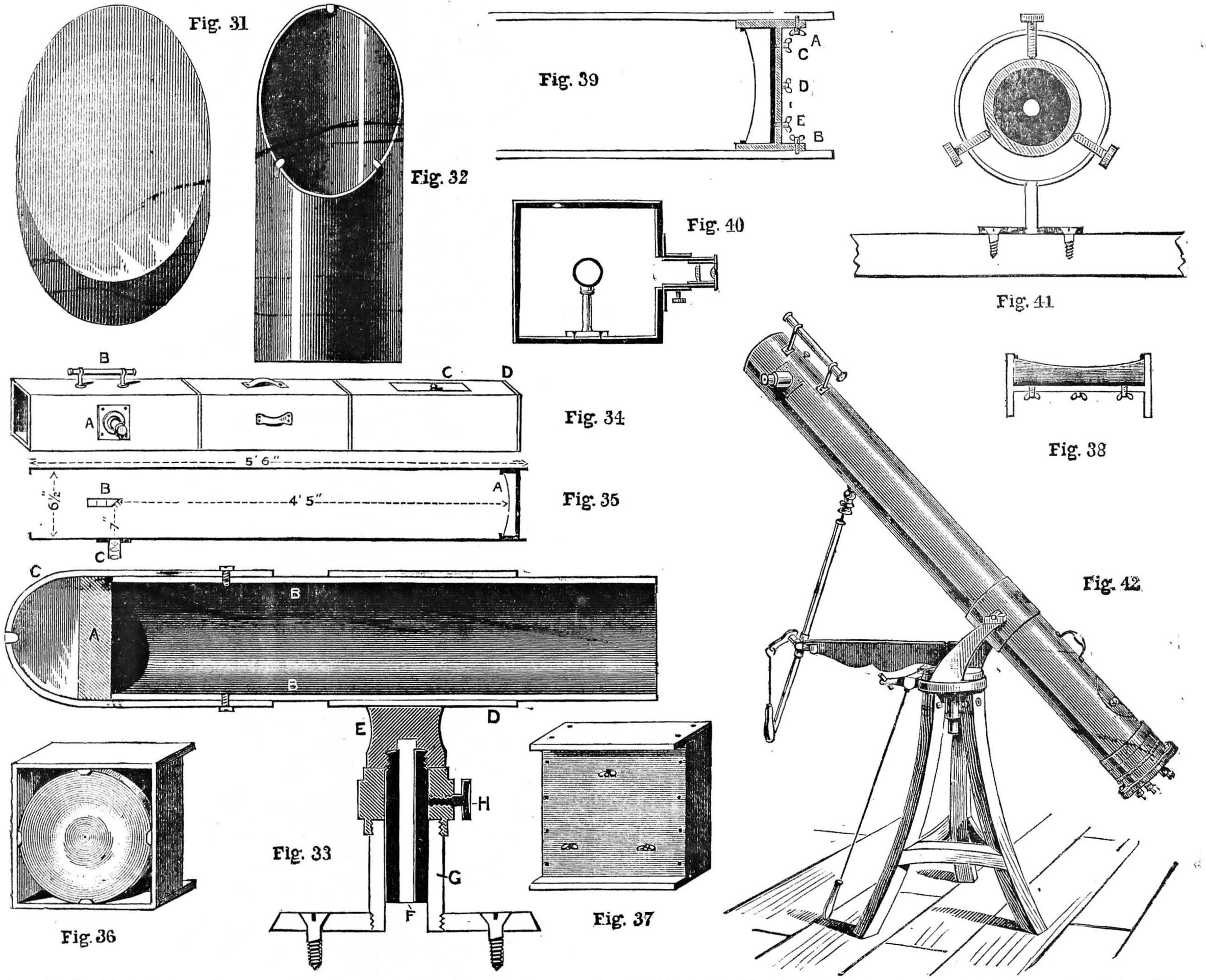

Specula for Newtonian Telescope. Fig. 31.—The Flat. Fig. 32.—Brass Tube for the Flat. Fig. 33.—The Mounted Flat. Fig. 34.—The Testing Tube. Fig. 35.—Ditto, Section. Fig. 36.—Wooden Cell for the Speculum (Front View). Fig. 37.—Back View. Fig. 38.—Section. Fig. 39.—The Speculum Cell in the Testing Tube. Fig. 40.—The Flat and the Eye-piece. Fig. 41.—Method of supporting the Finder. Fig. 42.—Newtonian Telescope (Altazimuth Mounting).

mark the extremities of an equilateral triangle (Fig. 37).

The flat has already been attended to, but its central position in the tube and the relation it holds to the eye-piece is indicated in Fig. 40.

The eye-piece may be mounted either in a plain sliding-tube or in a tube with rack-work attachment—preferably the latter. Sometimes for a shilling or two the brass front of an antiquated camera can be purchased, and this makes a really capital rack-work eye-tube when lengthened.

It would be superfluous to go further into detail. Those of my readers who are likely to succeed, will speedily learn that odds and central in its field of view will be within the field of view of the test-tube. It is known as the "finder," and the details of the making of such a small refracting telescope are given on page 654, No. 145 of WORK.

The Ramsden eye-piece is fully described, together with a very simple method of construction, in WORK, page 701, No. 148, and the Huyghenian or achromatic eye-piece has been treated of on page 293, No. 70, Vol. II. I must ask my readers to refer to those pages.

In eye-piece making, care has to be taken that the lenses are properly centred; but if the primitive form of mounting referred to be made until this condition is fulfilled. Then attend to the concave speculum, which will appear reflected in the flat as another circle having a dark central spot (the double reflection of the flat), and adjustment should be made, if necessary, by means of the three screws in the cell. The appearance when adjustment is perfect should then be: centrally, the dark spot; then the circle of the concave speculum; then the circle of the flat; and finally, the circle of the eye-tube.

* Much may be gained by the study of Mr. Charles A. Parker's papers on the Spectroscope—notably a capital chapter, dealing with eye-pieces, on page 323, No. 177.

NOTICE TO READERS.

NEXT week's WORK (No. 197) will contain, among other illustrated papers, the following:—

AN ELECTRIC PENDULUM.
A PORTABLE ROADWAY FOR CARTS.
CARPENTRY FOR BOYS.
HOW TO GRIND AND REPAIR SKATES.
PRACTICAL PAPERS ON PLUMBING—TRAPS.
GREAT ELECTRIC LIGHT.
DESIGN AND DECORATION OF ALL AGES—MEDIÆVAL.

*** The Editor makes this intimation in the hope that readers, having friends interested in any of these subjects, will bring the same to their notice.

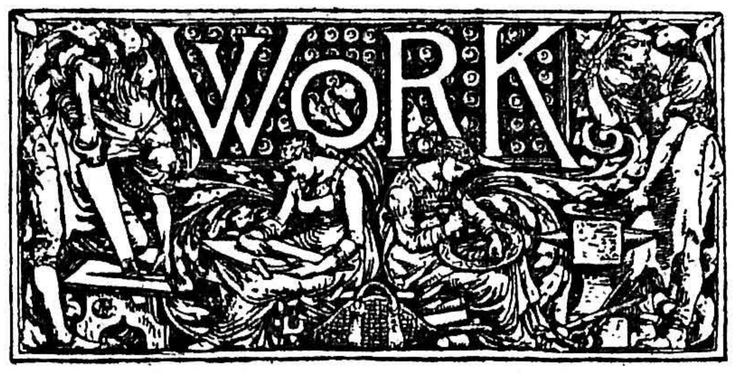

is published at La Belle Sauvage, Ludgate Hill, London, at 9 o'clock every Wednesday morning, and should be obtainable everywhere throughout the United Kingdom on Friday at the latest.

TERMS OF SUBSCRIPTION.

(Sent post free to any part of the world.)

3 months, free by post	1s. 8d.
6 months, "	3s. 3d.
12 months, "	6s. 6d.

Postal Orders or Post Office Orders payable at the General Post Office, London, to CASSELL and COMPANY, Limited.

TERMS FOR THE INSERTION OF ADVERTISEMENTS IN EACH WEEKLY ISSUE.

	£	s.	d.
One Page	12	0	0
Half Page	6	10	0
Quarter Page	3	12	6
Eighth of a Page	1	17	6
One-Sixteenth of a Page	1	0	0
In Column, per inch	0	10	0

Small prepaid Advertisements, such as Situations Wanted and Exchange, Twenty Words or less, One Shilling, and One Penny per Word extra if over Twenty. ALL OTHER Advertisements in Sale and Exchange Column are charged One Shilling per Line (averaging eight words).

Prominent Positions, or a series of insertions, by special arrangement.

*** Advertisements should reach the Office fourteen days in advance of the date of issue.

*** All letters suggesting Articles, Designs, and MS. communications for insertion in this Journal will be welcomed, and should be addressed to the Editor of WORK, CASSELL and COMPANY, Limited, London, E.C.

WORK correspondents are wanted in every Town.

A NATIONAL PAINTERS' CONFERENCE.—On the evenings of January 16, 17, and 18 of the new year will be gathered together at the Painter-Stainers' Hall, London, painters and decorators from all parts of the kingdom. This gathering promises to be not only unique but successful. For the first time in its history the ancient Painter-Stainers' Company has lent its aid and countenance to schemes of popular progress and education outside its ancient conservative precedents; and the portals of its ancient hall will be thrown open to all sorts and conditions of painters, with a view to the unanimous promotion of a national scheme of technical education for their common art and craft. Our purpose is to provide some measure of sound technical knowledge for all descriptions of trades. House-painting and decorating has been one of the departments of industrial thought and labour to which prominence has been given in WORK, and it has been no unusual experience for us to receive letters from journeymen painters who have freely acknowledged that from our pages they have learnt more of the *technique* of house-painting than was taught them during their apprenticeship. In bringing the matter of this conference before the whole body of WORK readers, we feel sure that those who have no vital interest in paint and painters will not begrudge the space for our special note of invitation to those who, as masters or men, will be welcomed at the time and place mentioned. English, Scotch, Irish, and Welsh will show their common bond of British nationality at this gathering, and we believe the occasion will be the turning-point of the condition of the kindred trades. The pleasure and profit which employers and employed alike will derive in this united effort for the common good will not—must not—rest with technical education. The workers in all parts are awake and in earnest; and if those who comprise the capital and employing division will but bestir themselves and look to their interests also, the social, educational, and economic status of the house-painting and decorating trades may in a few years be removed from the lowest to the highest levels of honourable industry. Such is rapidly becoming the case in the United States, and so may it be with the craft in Great Britain. Therefore we wish the National Painters' Conference every success.

COMPENSATION FOR WORKMEN.—The London County Council propose to obtain Parliamentary authority to grant compensation to workmen who may be injured, and to the families of those who may be killed, in the execution of the works connected with the Blackwall Tunnel under the Thames. This evident anticipation of fatal and other accidents is at first sight rather startling, but when considered in the light of past experience is only reasonable; for those engaged in such concerns know well that no works of magnitude are carried to a finish without some accidents of more or less serious character, and such an undertaking as the Blackwall Tunnel is fraught with more than ordinary difficulty and danger. The Thames Tunnel at Wapping, through which the East London Railway now runs, was twice drowned out with loss of life, and that is only 1,300 feet in length, while the Blackwall subway will be 6,200 feet long. This boring will be run at a depth of only seven feet below the bed of the river, and that seven feet consists mostly of shingly ballast and gravel. The central part of the tunnel—that immediately under the river—will of course be the point of principal danger, and it is the lives of the men working in that section which the Council is desirous of assuring. Putting aside the humanitarian aspect of the matter, it seems only reasonable that if a man is desired to work under conditions of exceptional danger some provision should be made against possible consequences; and although the means of driving tunnels have been vastly improved since the original Thames Tunnel was made, yet the most unceasing human forethought is not always equal to contending successfully against contingencies of a doubtful character. Should the proposal made in this case be carried out, there can be no reason why it should not be adopted in future in connection with other large works of a risky nature.

A NEW CLEARING HOUSE.—We are familiar with the clearing-house principle as applied to railways and banks. It is now applied to the relief of distress, and the author of this new application is Mr. Arnold White, whose scheme deserves publicity. To carry the scheme out a committee has been formed, and the function of this committee is not the time-honoured—or dishonoured—one of receiving subscriptions, but to place those willing to assist the destitute in direct contact with them. All that anyone desirous of helping a family during the severe winter months has to do is to communicate with the committee, who will place him in direct contact with a case or cases of suffering. It is calculated that if 50,000 of the well-to-do will take in hand one family each, there need be no deserving person in want in London. The scheme is, without doubt, the most thorough for the relief of distress that has yet been proposed, and if it be possible to relieve distress by giving, then it should succeed.

THE PRESERVATION OF MINERALOGICAL SPECIMENS.

Isn't it excessively annoying—to use no stronger language—after getting together with great time and trouble, perhaps expense, a collection, more or less complete, of mineralogical specimens, to find some of them melt, others splinter, and others, again, effloresce? To guard against the first difficulty, there is nothing to be done but enclose the specimens in an air-tight receptacle—glass jar or glazed box, according to circumstances—but for the others there are lots of little dodges, recommended by Continental authorities, calculated to preserve the specimens, though freely exposed to the air.

Specimens impregnated with salt should, after careful drying, be coated with boiled linseed-oil or a varnish which will not crack—better still, a mixture of the two. Prints of ferns, or other plants in the shale of the coal measures, should be brushed over with diluted gum-arabic, having a little sugar added, to prevent any tendency of the gum to peel off. Bone, or other fossils liable to splinter, should be allowed to remain from one to twenty-four hours, according to their nature, in a strong solution of silicate of soda or potash.

Fossil bones may also be brushed over with hot spermaceti, melted over a spirit-lamp or atmospheric gas-flame, and then the coat reduced and equalised by passing the specimen rapidly over the flame in all directions. Small specimens of fossil ferns, etc., may be painted with silicate of soda in solution; or it might be worth while to try for this purpose the "Fluate" supplied by The Bath Stone Firms, Limited, Bath, for preserving building-stones.

The most difficult fossils to preserve are those which contain pyrites, a substance that unfortunately has too great an affection for oxygen. Paraffin has the merit of being absolutely free from this generally beneficent gas, and its point of fusion is 110° F. Melt your paraffin in a metal box of suitable size and shape; then suspend your specimen therein, and let the paraffin cool, when you will have a solid block containing the specimen, hermetically enclosed like a fly in amber.

In conclusion, if it be possible to detach a small piece from the specimen without great detriment to the latter, use this little bit—or, better still, several little bits—to experiment with, and see which treatment gives the best results. Above all, if you find the above advice judicious, do not forget to write to Work, so as to let other readers benefit by your experience. If any difficulty presents itself, "Shop" is open to all readers.

BLACK DYE FOR PEAR-WOOD.

The following method gives a beautiful dark black colour for carved and turned objects in pear-wood:—Two parts of pulverised nutgalls with fifteen parts of ordinary wine, which is let rest for some days in a warm room or in the air in warm weather. The liquid is then poured out and passed through a cloth if a great many pieces of nutgall float on the top; then about half its volume of water is added.

In the same way a condensed solution of vitriol and water is prepared. If the wood is coated with the first liquid, and, when dry, with the vitriol solution, a fine black colour is obtained, which is darker according to the denseness of the second solution.

Adding a coat of wax melted in spirits of turpentine, rubbing carefully, the wood appears like ebony. If you want a certain immediate polish, a light coat of shellac, dissolved in spirits of wine, must be used.

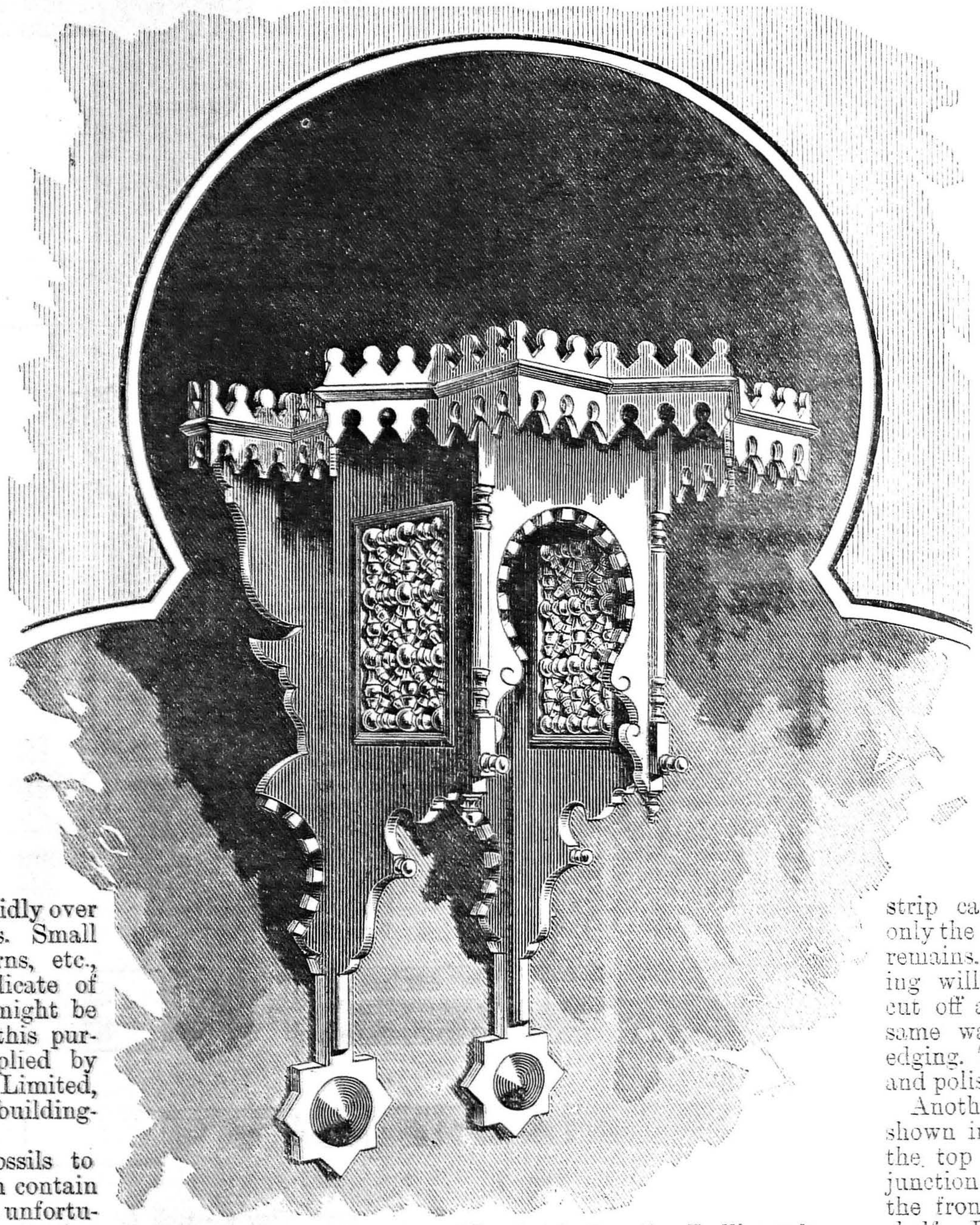

Fig. 11.—Perspective View of Bracket in Egyptian Trellis-work.

A BRACKET IN EGYPTIAN TRELLIS-WORK.

BY C. H. OZANNE.

The bracket illustrated is of very delicate workmanship, but it is not a very complicated affair, though it may look so at first sight. The back (Fig. 1) is cut in one piece with a fret- or band-saw. It is of ⅜ in. walnut. The shelf (Fig. 2) and sides (Fig. 3) are also single pieces. Fig. 2 is ⅝ in., and Fig. 3 ⅜ in. thick. Two sides will, of course, be required.

On the back the two sides are screwed from behind, the top of the sides reaching to within ⅝ in. of the top of the back, to allow room for the shelf, which is screwed down from above upon the upper edges of the sides and to the back. The sides are each fixed so as to be exactly above B, in Fig. 1, on each side. One piece (Fig. 4) is required ¼ in. thick. This is glued in position between the two sides and close underneath the shelf.

A quantity of the toothed edging in Fig. 6 is cut out, and divided into pieces of the necessary length to cover the edges of the shelf. The ends of each piece are cut off at the angle required to make them fit close to each other. Five of the corners of the shelf are right angles, so the edging for them will be cut off at an angle of 45°. The other angles can be similarly measured and halved, and the edging cut off accordingly. It is glued to the edges of the shelf.

Over this a moulding is glued. The size is given in Fig. 8, A, which is a section of the moulding. It will be seen that the moulding is the half of a squared strip sawn down along the diagonal. It can be made by sawing down the strip in this way with a fine dovetail saw; or the squared strip can be planed down until only the triangular piece required remains. The ends of this moulding will also be required to be cut off at various angles, in the same way as was the toothed edging. The moulding is ebonised and polished.

Another piece of moulding, shown in Fig. 8, B, is run round the top of Fig. 3 to hide the junction of the two sides, and the front piece (Fig. 4) with the shelf. It is also continued along the back, so as to cover the angle made by the back and shelf. It also runs round inside the top of the compartment made by the two sides and back. It is not required at the back of the front piece (Fig. 4), as it could not be seen. This moulding is also ebonised and polished.

Two pillars—or, rather, half-pillars—as shown in Fig. 7, are required to fill up the gap, A B (Fig. 3). In Fig. 7, A gives the front view and B the side view when mounted. These are also black, and polished.

Four of Fig. 5, A, will be required, and two of Fig. 5, B. A is fixed at C and E, and B at D (Fig. 3). The six drops are of lemon.

Nothing now remains but the three trellis-work panels (Fig. 9), which fit into the three spaces, A, in Fig. 1, and F, in Fig. 3. The

trellis-work is composed of walnut beads and lemon stars. The horizontal strips of bead-work are solid, and their ends are held by pegs turned upon them, and inserted in the moulding which frames it up. This moulding is shown in section in Fig. 8, c. It is black, and polished. The panel is first framed up, and then slipped into the space prepared for it, the edges being glued beforehand.

It would be best to fasten in these panels before the bracket is put together.

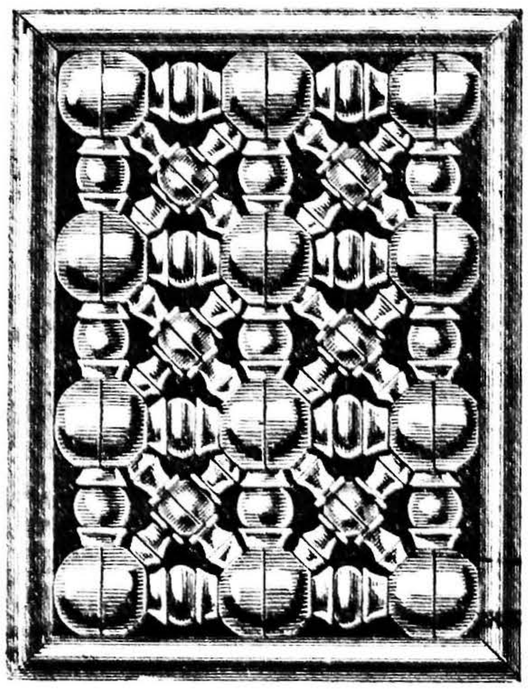

Fig. 9.

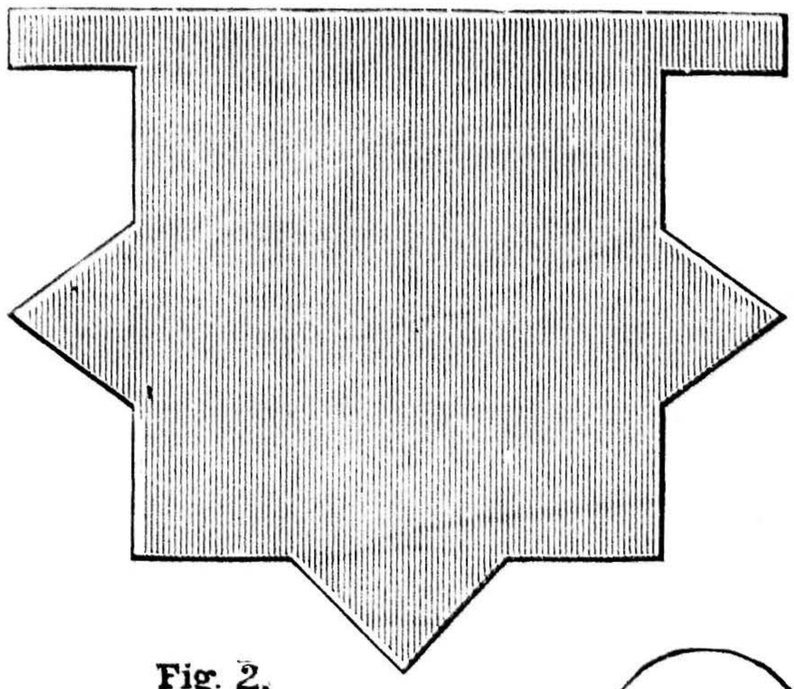

Fig. 2.

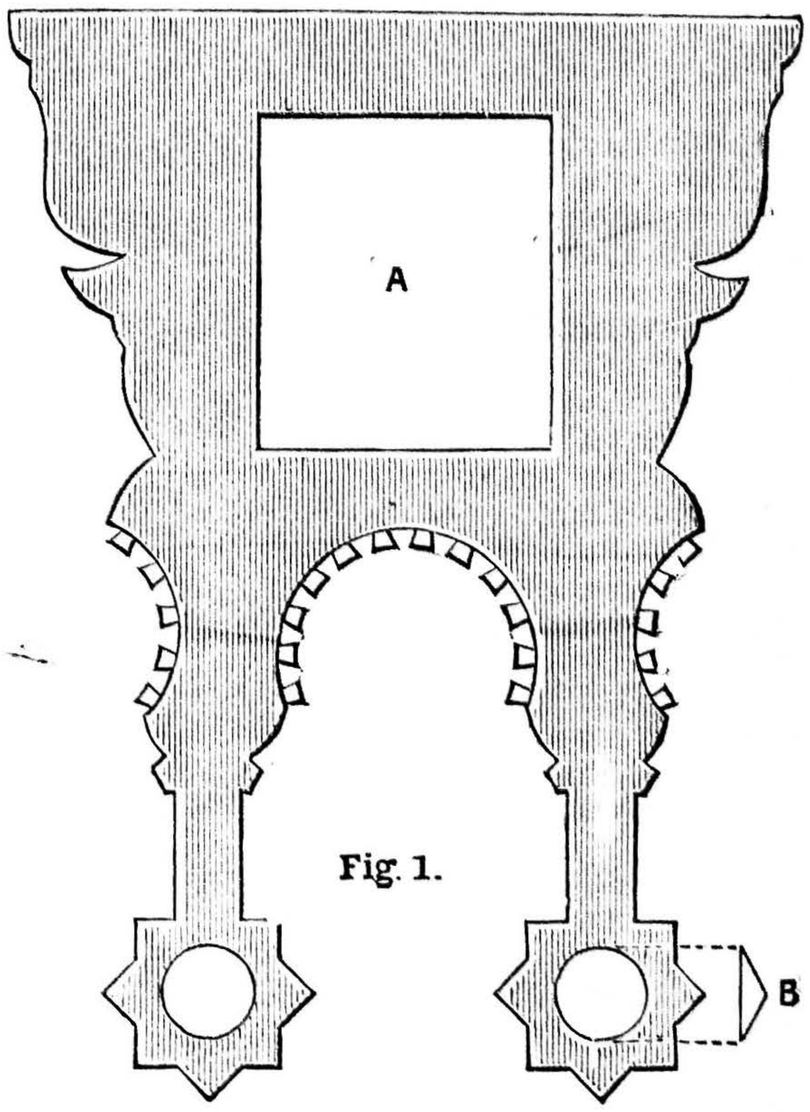

Fig. 1.

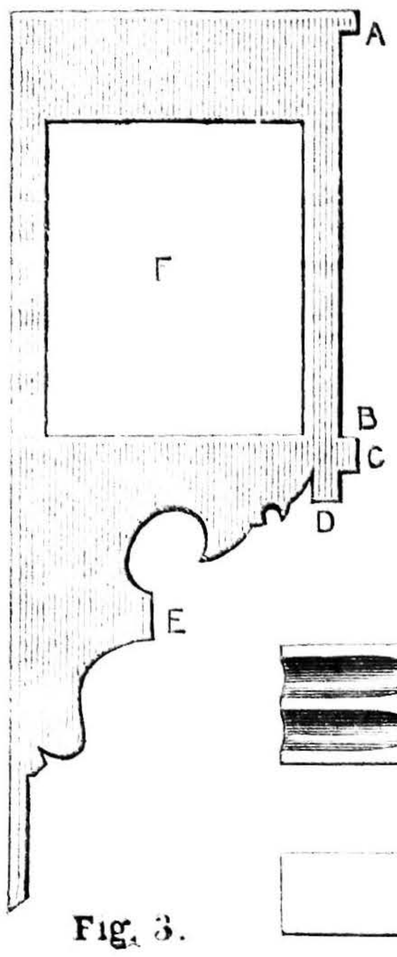

Fig. 3.

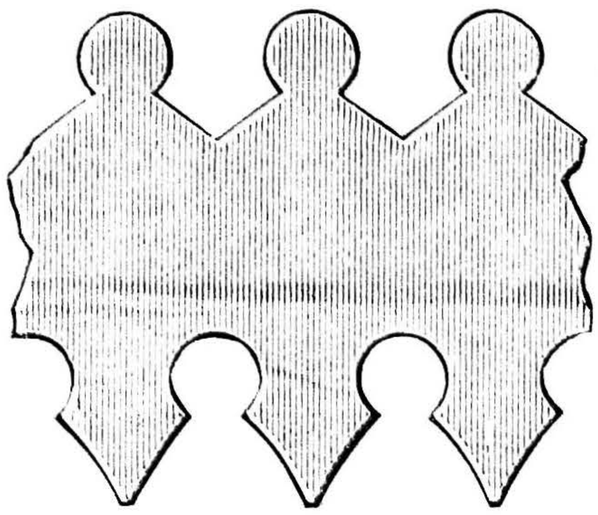

Fig. 6

Fig. 10

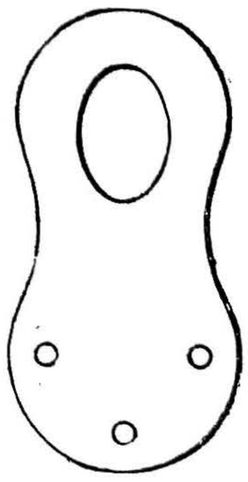

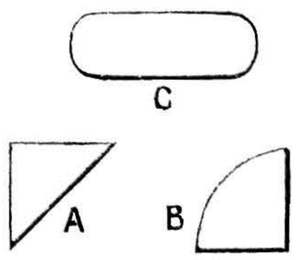

Fig. 8

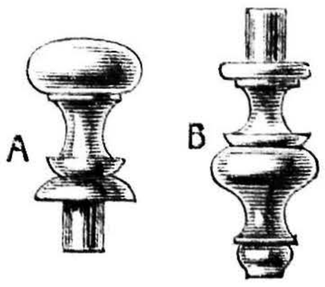

Fig. 5.

Fig. 7

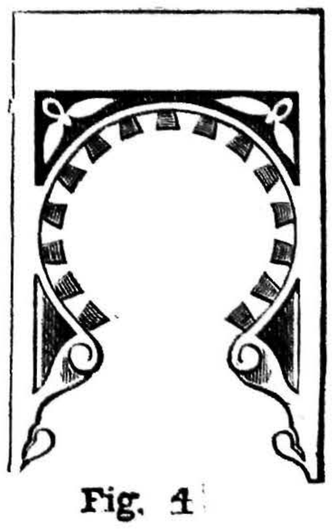

Fig. 4

Bracket in Egyptian Trellis Work. Fig. 1.—Back of Bracket. Fig. 2.—Shelf. Fig. 3.—Side. Fig. 4.—Arch for Front. Fig. 5.—Pendants. Fig. 6.—Toothed Edging. Fig. 7.—Pillar. Fig. 8.—Mouldings in Section. Fig. 9.—Panel. Fig. 10.—Plate by which Bracket is hung.

The front piece (Fig. 4) is slightly carved in relief, as indicated by the shading. In Fig. 1, B is a black polished disc, laid on in the position shown. The bracket is left dull, excepting the black parts, which are polished, as has been said. It is hung by two plates (Fig. 10), let into the back edge of the shelf. If desired, a lower shelf could be introduced at the level of c (Fig. 3), to hold a statuette or vase. I shall be pleased to answer any points of difficulty through the pages of "Shop."

The most durable grindstones are now composed of a mixture of pulverised quartz, powdered flint, powdered emery, and rubber. They outlast any natural stone.

BRITISH RAILWAY STATISTICS.

MIDLAND RAILWAY.

It may be truly asked: How many of the millions of travellers who use the railways of the United Kingdom in the course of a year have any idea of the magnitude of these undertakings: the vast sums of money sunk in their construction and maintenance, the huge accumulation of engines, carriages, and other rolling stock required to enable them to meet and carry out the demands of the business they have to do, the amounts of money received therefrom, the cost of the working expenses, and the amount of the miles run in the half-year? In order that our readers may obtain some correct ideas on these subjects, we have selected one of the best managed and the most enterprising of the railways in the kingdom—namely, the Midland, with its own mileage of 1,434 miles 54 chains, or a total of 1,942¾ miles worked over by its engines.

The capital of the Company on which dividend is payable stands at £67,800,622 7s. 5d., and the authorised capital at £100,392,754 13s. The maintenance of way and works for the half-year amounted to £364,906 8s. 5d. The cost of the locomotive power was £731,844 3s. 10d. The cost of the repairs and renewals of carriages and waggons stands at £307,830 15s. 3d. The Traffic Department expenses amounted to the sum of £849,028 1s. 11d., and the general charges to the sum of £80,153 14s. To meet these enormous outgoings, we find that the total revenue for the half-year was £4,431,078, and, deducting the total of the working expenses, £2,473,276, and all other expenses and outgoings, there remains to be used as dividend the sum of £1,492,480 15s. 6d.

We will now give some particulars of the plant, or means of carrying on the business of this Company, and we find that there are 2,087 locomotives. In the Coaching Department there are 2,910 passenger vehicles, 1,600 horse-boxes, carriage trucks, and brakes: a total of 4,510 vehicles. In the Merchandise and Mineral Department there are 1,485 cattle trucks, 68,679 goods waggons, and 1,497 covered ditto, 20 creasote tanks, 2,019 timber trucks, and 1,277 brake vans; thus giving a total of 107,858 vehicles in this department, to which if we add that of the Coaching Department, we get the grand total of 112,368 vehicles of all kinds.

The cost of repairs and renewals of the above, as we have seen, amounts to £307,830 15s. 3d., and that of the locomotive haulage to £731,844 3s. 10d., and the traffic expenses connected therewith to £849,028 1s. 11d.; whilst the general charges of the railway amounted to £80,153 14s.; and for this above expenditure we find the passenger trains were run a total of 7,922,240 miles, and the goods and mineral trains 12,169,046 miles—a grand total of just 20,091,286 miles in the half-year; and 18,107,078 passengers, not including season-tickets!

WORKMEN'S CLUBS.

BY ECONOMICUS.

The workmen's club movement has had a great deal to contend with. It has, of course, had the usual difficulty incidental to all working-class movements: viz., slender financial resources. Superadded to this, however, a still graver difficulty has been the purely gratuitous prejudice with which these clubs have been, until comparatively recent times, regarded by the public.

It has now been discovered by most thinking people that the "poor working man" has great social problems to solve, and his clubs and unions are now looked upon as part and parcel of the institutions of this country. There are not now wanting signs of a disposition among all sections of the community to assist these working-class movements to enlarge the sphere of their operations.

The particular form which this increased activity is to assume is worth specifying, inasmuch as it will give readers an idea of what is being done to strengthen workmen's combinations, and to put opportunities in their way of useful recreation. The leaders of the club movement, who are comprised in the Workmen's Club and Institute Union, which embraces more than four hundred affiliated clubs in London and the provinces, have purchased on behalf of the Union a site whereon to build a Central Hall and Club. This site, which has a central situation in London, being just off Gray's Inn Road, has cost £8,000, and the building operations, which are to be entered upon forthwith, are estimated to cost £11,000. As a result of this outlay, there will be convenient and commodious offices for the officials of the Union, and also for the officials of trades unions and other working-class organisations. On the recreative and educational side there will be a large hall, which it is hoped "will be used every evening for some purpose tending towards the improvement of the social and economic condition of the people." Provision is also made in the plans for a capital library and reading-room, rooms for classes, and rooms for games. A place like this, as the secretary of the Union says, ought to prove a great boon to working-class London. Meetings can be held here, and conferences of labour leaders held in times of trouble. A great advance this upon the back parlours of public-houses, which have hitherto been, perhaps, too closely associated with the labour question. With an institution such as the Central Hall and Club properly conducted—and the well-tried men responsible for its conduct may be left to see to that—the workmen's club movement will receive a stimulus, and will acquire a dignity that must make it a great social strength in the near future.

As to the clubs that belong to the Union, we have already said that they exceed 400. The number is increasing every year, and the standard qualifying clubs for admission to the Union is always being kept up. No fewer than forty-seven clubs have been struck off the affiliated list during the past year, one of them in consequence of its giving undue prominence to certain forms of entertainment that the Union, as an organisation for the welfare of the people, could not countenance. Among these forms of entertainment, the most insidious appears to have been boxing contests, which had to be very promptly dealt with. On this point the year's report says:—"The attention of the Union having been directed to one or two cases where this had taken place, active steps were taken to discourage the introduction of this feature into club life, and one metropolitan club, which declined to give any satisfactory assurance to the committee, was expelled the Union by a unanimous vote of the delegates present at a special general meeting, called to deal with this question. We are glad to record that the action of the Union has had the desired effect, and that the clubs generally now prohibit such entertainments."

The management of a workmen's club is by no means an easy matter, and but for some such organisation as the Union, the continued improvement of such clubs would have been impossible. The subscription is so low—even down to sixpence a month, and that sometimes payable in weekly instalments, and rarely higher than a shilling a month—that the members comprise a very mixed multitude, with often no common motive. Such clubs, in consequence, often break up into sections, whose squabblings, if unrestrained, end in catastrophe. Another evil resulting from the low subscription—which, of course, is a necessity where workmen's pockets are concerned—is that small clubs are unable to meet their fixed expenses without relying too much on the profits from the sale of refreshments. This is apt to induce the management to encourage those members who spend their money freely, and the general atmosphere of such a club ultimately becomes far from wholesome.

With difficulties like these in the way, any body of workmen or others who decide on starting a club should always previously consult the secretary of the Club and Institute Union. The terms under which a club may join are not onerous, and the benefits are incalculable. It gives free legal advice, and, if desired, acts as a Board of Arbitration in disputes. It also issues publications as to the best method of starting and managing clubs, and will even send speakers to address meetings called in support of a proposal to establish them.

SCIENCE TO DATE.

Chlorophyll.—It is usually stated in books on botany that chlorophyll, the green colouring matter of plants, contains a little iron. Dr. Molisch has recently been investigating this substance, and states that it contains no iron.

Fossil Bones.—M. Carnot finds that the older fossil bones are, the greater is the amount of fluorine that they contain, and suggests that a determination of the quantity of fluorine present may assist in determining the age of fossil bones. The proportion of fluorine in many fossil bones is ten to fifteen times as great as in recent bones, referred to the same weight of ash.

Lake-dwellings.—The discovery is announced of an ancient lake-dwelling in Somersetshire, near Glastonbury. Excavations have been made during the present year of mounds rising from 1 ft. to 2 ft. above the surrounding soil, and measuring from 20 ft. to 30 ft. across, which were suspected of being of archæological interest. The search has been rewarded by the discovery of woodwork, bronze and iron implements, and pottery. A canoe, formed out of the trunk of a tree, was also found. The settlement is supposed to belong to the so-called late Celtic period, which followed the Bronze Age, though probably at a great interval of time.

Acetylene.—M. Maquenne has perfected a method for preparing pure acetylene easily and in large quantities. It consists in the action of water on barium carbide. This substance is obtained by heating to a red heat, in an iron bottle, a mixture of barium carbonate, magnesium in powder, and carbon. A product containing about 38 per cent. of carbide of barium, BaC_2, is thus obtained. It is powdered and placed in a small flask fitted with a double-bored cork, carrying a dropping funnel containing water and a delivery tube. As the water is allowed to drop on to the powder, acetylene gas is given off, and the rate of evolution can be easily regulated.

Cancer in Fish.—Professor Scott has observed the occurrence of cancer in specimens of American brook trout kept in confinement at Opoho (New Zealand). Males and females were alike affected, and the diseased fish never recovered. This disease has never been observed in fish before.

Incandescent Lamps.—According to Nichols, the diminution of efficiency in incandescent lamps is due to three causes—the loss of vacuum, increase of resistance due to the disintegration of the filament, and the deposition of the disintegrated carbon on the glass. This deposition gives rise to what is called the age-coating. The rate of deposit is quicker in the early part of the life of the lamp. Thus, in a lamp which lasted 800 hours, the greater part of the coating was deposited during the first 200 hours. There is no difference between treated and untreated filaments as regards the coating produced, but in lamps exhausted without the aid of mercury the age-coating is hardly perceptible.

NOTICES.

Jewellers' Tools.—Messrs. Calipe, Dettmer & Co. send their catalogue of materials for the jewellery, dental, and metal trades. It would be unwise to particularise any special item of the list, as it contains the sizes, prices, and generally an illustration of articles indispensable to wholesale and retail workers in the above trades, from a split ring or brooch catch to an iron safe or turning-lathe. We have inspected Messrs. Dettmer's *dépôt*, and can vouch for the facilities afforded for dealing with the largest or smallest requirements of workers in the jewellery and kindred trades.

Hicks's Ellipsograph.—The accompanying illustration shows the principle of Hicks's Ellipsograph—an ingenious instrument which we predict will be found of real use in every draughtsman's office. It consists of two parts: (1) The compass-bar, which carries the pencil and two movable pins (these slide along the bar, and can be fixed at distances required for width and length, in each instance measuring from pencil to pin); and (2) the grooved double set-square of 45°. Also a case for holding the same. It is an instrument less cumbersome than the ordinary

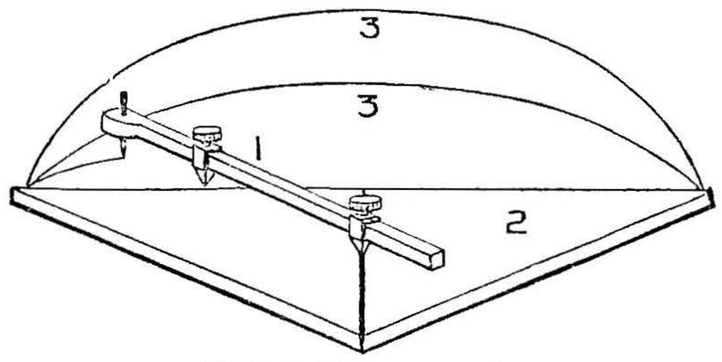

Hicks's Ellipsograph.

trammel, and as such is much wanted for describing elliptic curves in geometric drawings, ornamental headings, etc. An extempore enlargement of it, using only one set-square, would be well appreciated in the workshop for marking out oval table-tops, frames, etc. This drawing-tool was invented fifteen years ago by the present maker when a student in one of W. Busbridge's science classes. Since then he has greatly improved it, and now offers it to fellow-students and workmen at a low price, which should bring it within the reach of all.

Chip Carving.—This is a form of pleasurable and profitable employment indulged in, we know, by thousands of our readers. From time to time instruction and designs have been given in Work, and we hope to furnish more at judicious intervals. Meanwhile we can well draw attention to Mr. Joshua Buckley's wood-carving kits. These include chip-carving tools, ordinary wood-carving tools, books of designs for carving, and articles carried out in different styles of wood treatment. All that has been submitted to us has the merit of being original, good, and cheap.

Band-saws.—"History of the Band-saw," by W. Samuel Worssam, A.M.I.C.E. (Emmott & Co.)—This pamphlet gives a concise account of the history of the band-saw from its earliest traceable record in 1808, when one William Newberry patented a steel ribbon for sawing wood, down to the present year, which has witnessed the introduction of Ransome's improved band-saw machine for logs. No greater authority exists than Mr. Worssam upon the subject of the band-saw; and all who wish to know its history in a brief, concise way, should possess themselves of this pamphlet.

Phipps' Useful Jack.—These useful little tools are intended for the workman's basket, and will be found handy for a thousand purposes. They are strong and well fitted with right- and left-hand screw, 1 in. square thread, wrought iron, weigh only 4 lb., are 8 in. long when closed, will give a lift of 5 in., and will pull 3 in. They will be found useful by all sorts and conditions of practical workers, and every carman might do worse than carry one in case of breakdown or getting in a hole. The British Iron and Hardware Agency store them.

TRADE: PRESENT AND FUTURE.

*** *Correspondence from Trade and Industrial Centres, and News from Factories, must reach the Editor not later than Tuesday morning.*

TINPLATE TRADE.—This is now looking up. Owing to the effect of the Presidential election in the United States, many employers in the tinplate trade have decided to reopen their works; and things certainly look better for the present winter than they have done for some time. Shipments are pretty regular to St. Petersburg and Russia.

OIL TRADE.—Palm oil is higher in price than it has been for some time. About 200 tons have been sold, New Calabar at £22 5s., Congo at £22, and Cameroon at £22s. 10s. to £23 per ton. Tallow is steady. Olive oil is £35 to £40 per ton, according to quality. Linseed oil is quiet at 19s. 3d. to 20s. per cwt. Cotton-seed oil is firmer at 18s. 6d.—cheaper than usual. Resin is in fair demand, prices being: Common, 4s. 4½d.; medium, 4s. 9d. to 7s. 6d.; and fine, 8s. 6d. to 11s. per cwt. Spirit of turps is steady at 23s. per cwt.

COTTON TRADE.—Another week of the great dispute in the Lancashire cotton industry sees both sides still firm. It is considered probable that any prospect of an early settlement is now remote. The locked-out operatives have received considerable assistance from their fellow-workpeople of Bolton, who have decided to subscribe £10,000.

ENGINEERING TRADE.—In the Lancashire district one or two large stationary engine builders are fairly busy, as are also boiler makers. The majority of works are, however, so very slack that not only are the workmen being discharged but the office staffs are also being reduced, thus indicating that there is little prospect of a revival of activity taking place for some time. Most of the large firms of textile machinists have but little work on hand, but in one or two cases makers of this class of machinery continue busy.

IRON TRADE.—Next to nothing is being done in the Lancashire iron trade. Finished iron is in little demand, and prices are very unstable. Recently finished iron merchants in this district reduced their list prices 10s. per ton for bars taken out of stock.

STEEL TRADE.—The prices for hematites are about 55s. 6d. for average foundry qualities, but steel billets could now be bought under £4 7s. 6d. In steel plates very low quotations are being made, and the best boiler-making qualities are being offered at £6 10s. to £6 12s. 6d.

SHIPBUILDING TRADE.—Our Liverpool correspondent writes:—Owing to the depression in the shipbuilding trade of this port, ironfounders, shipwrights, makers of forgings, etc., are all very short of work, and are working with as few hands as possible. Many men are out of work, and as prospects do not seem brighter for the future, the winter will be a hard one for them.

TIMBER TRADE.—Messrs. Farnworth & Jardine report that the timber imports have been large, and prices difficult to maintain. There is no change in value in yellow pine timber. The consumption of red pine has been good. Oak has moved off slowly. Ash has been in fair request, and prices are steady. The import of pine deals has been too heavy, the stock is much too excessive, and there is no improvement in values. Birch is firmer. Stocks of pitch pine have accumulated, and are too heavy, prices are declining, and the market is altogether unsatisfactory. Imports of furniture woods have been on a moderate scale. The recent sales were well attended, when most of the wood offered was disposed of, though, in some cases, at declining prices, and stocks are generally of moderate compass.

STEEL AND IRON TRADES.—In Sheffield there is no alteration in the prices of hematites, forge-iron, and Bessemer material. Railway material is not inquired for. There is but little work at the rolling mills, tilts, and forges. At the armourplate works in the neighbourhood of Brightside, 1,000 men are out of employment, and hundreds more are working short time. The same condition of things prevails in other manufactories—notably the cutlery and file trades.

SILVER TRADE.—The Sheffield silver trade is the one exception to the rule of general slackness, but in this trade the customary Christmas orders have not come in so freely as last year, and manufacturers and workmen are looking forward to the new year for a change for the better.

JEWELLERY TRADE.—In London this is duller now than most of the present generation of workmen can remember it to have been. The year soon ends, and with the new one trade may be expected to improve, if there is any truth in the reports of the royal marriage we hear of

SHOP:

A CORNER FOR THOSE WHO WANT TO TALK IT.

*** *In consequence of the great pressure upon the "Shop" columns of* WORK, *contributors are requested to be brief and concise in all future questions and replies.*

In answering any of the "Questions submitted to Correspondents," or in referring to anything that has appeared in "Shop," writers are requested to refer to the number and page of number of WORK *in which the subject under consideration appeared, and to give the heading of the paragraph to which reference is made, and the initials and place of residence, or the nom-de-plume, of the writer by whom the question has been asked or to whom a reply has been already given.*

I.—LETTERS FROM CORRESPONDENTS.

International Manufactures. — B. A. B. (*London, N.W.*) writes:—"As, no doubt, many of your readers are not well posted up in economics, and as every light upon the subject is of value, I, for one, am glad of your paragraphs on the middle page. But I must confess that I cannot understand your note in No. 183, headed as above, and I hope you will be able to give more light, and I believe in enlightening me you will do the same for thousands. To aid in the clearing away of the difficulty, I will state what I believe we both admit, and then ask a question or two. (1) It is best for each nation to export whatever it can produce advantageously, compared to the nation which receives the goods. (2) The converse holds good: It is best to import whatever we can buy of the foreigners better and cheaper than we could produce it ourselves. (3) If shippers are to transport goods cheaply, they must have a cargo both ways, in and out. (4) It is better that trade should be mutual. (5) In cases where the material is abundant abroad, but not here, it can be, and often is, the case that the finished article is brought here instead of the raw material. We believe that to be judicious. But now, I fear, we part company, except that we all agree that 'the sooner it is understood the better it will be for this country,' etc., to the end of the paragraph. Now the questions: (1) Do we buy and sell, or do we barter?—that is, do we put a value, expressed in money, on what we sell, and does the foreigner too? (2) If we barter, does your illustration hold good *unless* the same merchant wants to barter toys for textiles? (3) If the toys are sold here for less money than they cost the foreigner, someone must lose—who is he? (4) If the foreign buyer of textiles is a gainer by the toy-maker's loss (if the toy-maker does lose), does he recompense him? (5) If the textile seller gains, does he bear the loss on the toys? (6) If neither buyer nor seller gains or loses, because the goods are bartered each for each, how does it affect the English toy-maker in the case described? (7) How is it that we import and export goods of very nearly the same class of each to the same countries? (8) And is it due to protection, or lack of competition, or what other reason, that both the native and imported goods are dearer abroad? We are not surprised at English goods being dear in Germany, but some of us *are* surprised at German goods being dear in Germany, but cheap here. If all these questions are outside the scope of WORK, please refer us all to some book or source of information. At present, in WORK, economics are supplied just enough to whet our appetites."

Wood Tests.—A. R. (*Scorrier*) writes:—"The following are recent tests with the four kinds of woods mentioned, which may be useful to many readers of WORK":

	Weight per cubic foot.	Specific Gravity.	Transverse Strength per square inch.	Dimensions of each Piece.	Weight the Piece broke with.	Direct Cohesion on square inch.	No. of Years assigned for Shipbuilding.
	lb.			in.	lb. per sq. in.	lb. pr. sq. in.	Yrs
Indian Teak	49·47	807	2,203	2 × 2 × 30	13,207	3,301	14
English Oak	58	886	2,117	2 × 2 × 30	30,287	7,671	9
Jarrah ..	63·12	1000	1,800	2 × 2 × 30	11,760	2,740	12
Karri ..	61·31	981	2,284	2 × 2 × 30	28,280	7,070	12

II.—QUESTIONS ANSWERED BY EDITOR AND STAFF.

Manchester Dynamo.—WIRE.—A Manchester dynamo can be run as a motor, but is not such an efficient electro-motor as a machine specially designed and wound for the purpose. I do not see what good purpose can be obtained by using a Manchester dynamo to charge a set of accumulators, and then use the current from these to work the same dynamo as a motor.—G. E. B.

Trimming Dynamo Brushes.—JUMBO.—No secret. Simply cut the ragged ends off with a pair of shears, leaving the copper gauge or foil straight. Readjust the brushes to give the freshly-cut ends the same lead as at first.—G. E. B.

Hand Cycle.—W. J. H. (*Birmingham*).—About the best hand tricycle is the Velociman, made by Singer & Co., Coventry. Write them.—A. S. P.

Safety Tires.—A. J. S. (*Watford*) has not been reading up the papers on Cycle Making and the numerous replies to correspondents in "Shop," or he would have found all he now inquires for. As to tires, he does not say what kind: whether solid, cushion, or pneumatic. He will get best tires by paying the best price from any respectable cycle dealer, also good cement for putting them on. To re-enamel, scrape every part of the machine, and rub with emery-cloth. Get Guest's or Club black enamel of any cycle dealer; coat the work copiously with a flat brush. When dry, rub over with a piece of cloth with finest emery-flour; then apply another coat of enamel. For a better job, get it stove-enamelled by a practical enameller.—A. S. P.

Tiles for Hearth.—A NEW SUBSCRIBER.—Mark the face of the tile where it is to be cut, then lay it on the edge of a flag or hard stone, and bruise along the line with a small chisel and hammer, backwards and forwards, a few times, when, if it does not part, a tap on the back will part it. The tile should be held in an angular position, and the chisel carefully used; or the tile may be embedded on dry sand on a stone slab, and bruised with the chisel. After a little experience they can be readily cut; the rough edges may be rubbed on a stone.—M.

Rosette Papers.—D. J. E. (*Brynmawr*).—The most likely firm to supply you with the material you require is Bemrose & Sons, of 23, Old Bailey, London. They make a speciality of rosette papers cut mathematically correct to nine different sizes (extra sizes to order), in gold and silver, white, ivory (light buff), violet, light brown (to imitate leather), ebony, red, orange, primrose, cedar, dark blue, light blue, green, and lavender. In gold and silver the packets are 1s., and other colours 6d. You would probably find Mr. W. Bemrose's book on "Paper Rosette Work and How to Make It," interesting to you. It is plainly illustrated and described by thirty-six lithographic designs for various useful and ornamental objects. Following out the information, pretty effects may be obtained in home decoration.—F. G.

Hot-air Engine.—J. S. (*Preston*).—The makers of the Robinson hot-air engine are Messrs. Norris & Henty, Abchurch Yard, London, E.C.—Q.

Oil.—W. A. S. (*Birmingham*).—If you used any kind of oil with it, your blacking would not give a polish, the only object there is for using blacking. I think you will find the following suitable for the purpose you name. Put ten parts of beer, and one each of vinegar and sugar, into a bottle, and add it to the blacking as it needs it, well shaking the admixture first.—W. G.

Sewing Machines.—PERSEVERE.—I may state that there are no other books published on sewing machines alone but those of the manufacturers—viz., books of instruction on their own speciality. Let him write to the makers of the machines he is attending, and they will be glad to forward him the books of instruction free. As PERSEVERE is a fitter, he will have some knowledge of mechanical motion. He can greatly supplement that knowledge by reading "Mechanical Movements," by Thomas Walker Barber, Engineer, published by E. & F. N. Spon, 125, Strand, London, at 7s. 6d.; also "Practical Mechanics," by Prof. Perry, M.E., at 3s. 6d., published by Messrs. Cassell & Co., Ludgate Hill. He must also pay marked attention to the arrangement of cranks, cams, and levers, the value of their relation to each other as arranged in his machines; by such attention there is nothing to prevent him from becoming an expert in the speciality. Being a good mechanic, with the use of tools at his hand, as well as some knowledge of mechanics, he will soon overcome any practical difficulty. With regard to slip-stitching, this is caused by the needle being either too high or too low; it may also be caused by the tension not being properly adjusted to suit the thickness of the material that is being sewn. The screw in front of the machine (if a Singer) is the one he must adjust. In adjusting the needle he must first place the gauge mark level with the top of the slide; the eye of the needle must be then level with the needle-plate. Try another method to prevent slip-stitching by not threading the shuttle through so many holes. If the point of the shuttle has become blunted, sharpen on a piece of Turkey stone, as a blunt shuttle is also likely to cause slip-stitching.—T. R. B.

Wiring and Knocking up.—T. D. (*Cambridge*).—It is rather a difficult job for an experienced workman to wire with such a large size as ½ in. rod such a small circle as 24 in. diameter. I do not see the need for such a size to be used; ⅜ in. would be ample. I can tell you that, unless your articles are made of the best charcoal plate, they will not stand the flanging back, but will split. However, I will try to help you all I can. The tools you will want are a large bick iron, a pair of compasses, and a mallet, and if you have a "jenny," so much the better. Proceed by setting the compasses to twice the size of the rod you desire to use. Make a mark with them round the inside of the pan that is to be wired; this is for a guide mark in throwing off the flange. Now hold the pan on the bick iron so that the line is level with the edge of the tool; then go round it with the mallet, striking lightly, and not knocking the edge back too far. Do this very carefully, so as to get your edge or flange even all round. Shape up a bit after once round, and then repeat the operation, striking more on the outside of the edge in order to stretch it a little. When you have got the edge as far back as you can in this way, take the bick iron out and replace it with the pointed end in the hole of the bench. You will find that the other end is (or it should be) bevelled off;

this will allow of your bending the edge over the remaining distance required; do not make it too sharp in the angle, or you will have a difficulty in getting the wire close up. You will also find that the preceding operations have thrown the article much out of shape; but this does not matter, as it will come right again in the wiring, or near enough, so that it can easily be shaped afterwards. Cut off the rod to the required length, form it into a circle, lay it round the article, and cut off any overplus. Press well up, and give drawing blows with the mallet, using as large a tool as you have to wire on. When you have got all round roughly, go round again, putting the blows closer together. Then, to finish off, run it through the jenny, or, if you have not one, you must rest it on the square edge of a tool, and go round the top with a mallet, or turn it the other way up and "tuck" it with the paning hammer. Throw off the edge for the bottom in the same way, only it will not need to be more than $\frac{1}{16}$ in. in width. Cut the bottom $\frac{3}{16}$ in. larger all round than the edge, turn it up on a half-moon stake or on the flat end of the bick iron, as previously mentioned, slip it on, tap round with a small hammer, and then pane down. Next, slightly turn the bottom by running round it with a mallet on the hatchet stake, and finish knocking up on side stake or similar tool. See my lessons on Sheet Metal Work in Vols. I., II., and subsequent numbers of the publication.—R. A.

Glass Partition.—METRONNE.—My advice is to give up all idea of ferns, and substitute one of the patent "Glacial Decorations," or imitations of stained glass; these can be got in an endless variety of designs at all prices. Write or call on Perry & Co., Holborn Viaduct, London. Articles have appeared on Glass and Picture-frame Gilding on pp. 333, 364, 542, 603, 605, 637, 782, 795 of Vol. I.; also on pp. 245, 261, 357, 602, 634, 649, 686, 701, 708, 750 of Vol. II.; and on pp. 262, 350, 398, 412, 443, 604, 668, etc., of Vol. III. I should strongly advise you to take WORK in every week. You would find it a splendid reference on all matters; and likewise recommend it to your friends.—E. D.

Watch and Clock Cleaning and Repairing.—J. B. (*Norden*).—I am pleased to hear you find these papers helpful. Pivoting, etc., will be dealt with in due course, also lever and verge watches. All ordinary repairs will receive attention as far as space allows. With regard to the advertisement to which you refer, I can only say that it has nothing to do with the writer of the papers on Watchwork now appearing, and in its wording is, in this respect, calculated to mislead readers. As stated before, Messrs. Hunt & Son, of Ironmonger Street, St. Luke's, London, or Messrs. Grimshaw & Baxter, Goswell Road, London, can supply any tools or watch parts; and the former firm can, I know, practically assist any who get into trouble with watchwork.—F. J. G.

Spring Mattress.—T. T. B. (*No Address*).—When the wood tray is ready for the springs, arrange them equally, and fix with three wire staples to each spring; lace the tops of springs with lay cord, or bring a web across each row both ways, and sew with twine in order to keep springs from touching each other. Tack a strong canvas over the springs, and sew a 9 in. strip of canvas all round about 6 in. from the edge; stuff and tack this to form a firm, yet soft, edge to the mattress, putting in a row of stitches to keep up the edge. Then arrange rest of stuffing, cover, and taft as usual. Do the preliminary work well.—B. A. B.

Wooden House.—F. H. K. (*Brighton*).—You must contrive to get a current of fresh air passing through the house, especially when the fire is lighted—say, an inlet at the back or under the stove, and an outlet at the highest point of your roof, the inlet and outlet so arranged, with relationship to each other, that the whole area of the house is supplied with fresh *warm* air. What you want, as far as I can at present judge, is ventilation, and without it you are bound to suffer as you describe.—E. D.

Crafts Exhibitions.—READER FROM No. 1.—If you address a stamped letter to the secretary of the particular exhibition in which you are interested, no doubt the Agricultural Hall authorities will send it on.

Making Dynamo.—LAURÆRNEST.—Full instructions for making dynamos were given in Nos. 92, 94, and 99 of WORK (see pp. 642, 677, and 756 of Vol. II.). Dimensions of dynamos suitable to your requirements were given on p. 758, Vol. II. You do not give the candle-power of your lamps. If they are 10's, four will equal 40 and six equal 60 c.-p. Perhaps a 50 c.-p. dynamo will light these. This will take a $\frac{1}{4}$ h.-p. motor to drive it. If the lamps are of 16 c.-p., you will require a 100 c.-p. dynamo, and this will take a $\frac{1}{2}$ h.-p. motor, such as a small gas or steam engine, to furnish enough power.—G. E. B.

Copper Bronzing.—BRONZES.—Brass may be bronzed by dipping in weak nitric acid in contact with scrap iron. The article must then be rinsed, dried in hot sawdust, and varnished or lacquered. Green bronzes are obtained by dipping the articles in vinegar, and allowing this to dry on them. Repeat several times until coated with verdigris. Blue effects may be obtained by touching parts with a rag moistened with ammonia. When dry, brush with a soft brush soiled by rubbing against beeswax. The whole range of bronzes have been described in WORK, Vol. I., pp. 220, 637, 643; Vol. II., pp. 324, 390; and Vol. III., p. 602.—G. E. B

Lincrusta.—W. H. S. (*No Address*).—As this is a patented substance, it is extremely unlikely that anyone will give information as to its composition.

Photographer's Retouching Medium.—TIRO HUDD.—Take 2 drachms of gum dammar, and dissolve in 6 drachms of benzole; then add 3 drachms of turpentine, or sufficient to make it a workable consistency, or Canada balsam thinned with turpentine.—D.

Window Sashes.—C. C. (*N.B.*).—Write to Mr. Hough, of 135, Great Suffolk Street, Southwark, London, S.E., who will, I have no doubt, supply you with full particulars; but if you were to write a little more plainly you would stand a better chance of getting a fuller reply. There is a certain style about your writing that wants a lot of study.—E. D.

How to Make a Wood Lathe.—AMATEUR.—I can only find something on p. 621 of Vol. I. But then my Vol. III. is at the binder's.—F. A. M.

Design for Bazaar Stall.—ECONOMY.—Possibly the accompanying design will meet your economical views; it need cost but 2s. or 3s., and your own taste and that of your lady friends may make it as artistic as you please. Get four tinned-beef boxes (A, A, A, A, ground plan, Fig. 1). The lot may cost you 1s. 4d. at the provision shop. Fix them in position by nailing to stout pieces of scantling, as at B in the figures. The rear piece is placed inside the boxes, that it may not interfere with the feet of the stall-keeper. Fix uprights in outer angles of boxes, and wedge them tightly in with bricks, as at C, Fig. 2. Affix cross-pieces as shown, *lashing*, not nailing, them to the uprights, that the wood may not be damaged. The platform for display of goods will be of boards laid on cross-pieces, and a barrel set beneath, as at D, Fig. 3, will give the additional support it may need. The diagrams show construction to scale; and, except the four bottom pieces, which are nailed, the rest of the wood can be borrowed, as it will be none the worse. The framework thus made, you can drape and dress with evergreens to your taste. The drapery used you will, of course, dispose of at close of the bazaar by auction or some other of the methods usual on such occasions.—S. W.

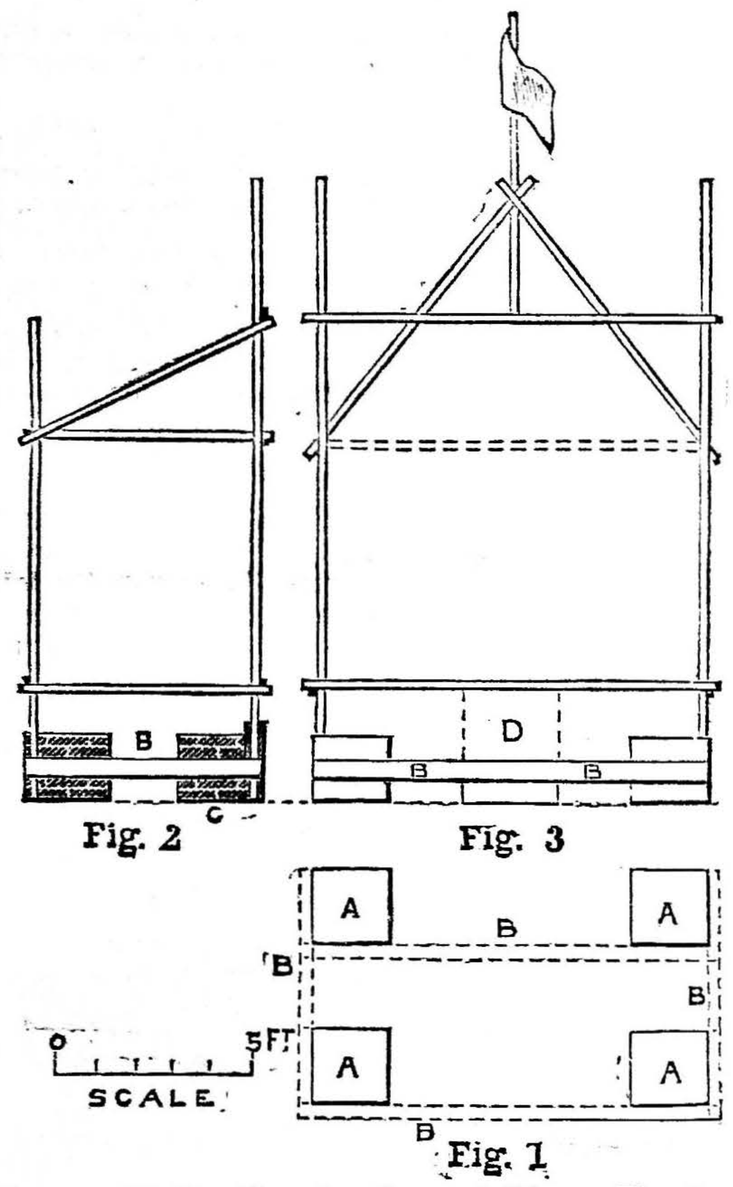

Bazaar Stall. Fig. 1.—Ground Plan. Fig. 2.—Brick Fixing for Uprights. Fig. 3.—Platform.

Safety Bicycle.—C. W. L. (*North Tawton*).—The numbers of WORK in which the "Construction of the Safety Bicycle" appeared (Nos. 107, 111, 115, 119, 124, 127, 132, 137, and 142) are still in print, and can be obtained from Messrs. Cassell & Co., or any bookseller.

Bookcase.—F. H. R. (*Queen's Park, W.*).—Articles appeared in WORK, Nos. 36, 44, 48, 52, 75, 85, and 127.

WORK.—Writing-desk.—H. C. (*Clapham Junction*).—The price of WORK, Nos. 31 and 38, including postage, would be 3d.; No. 41 is out of print. Instructions for making writing-desks have already appeared in WORK. Purchase Nos. 61, 66, and 145.

Tuning Dulcimer.—P. J. (*Perranwell, R.S.O.*).—In the harmonium you have the best possible guide to tuning the dulcimer. The scale of all dulcimers, no matter what size, is that of G—that is to say, the lowest note is called G, although the actual pitch may be D, E, F, or any other note. If you therefore tune the lowest steel note to 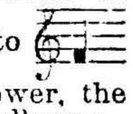 and the lowest brass note an octave lower, the actual notes of the whole scale will be as follows:

Brass:	1	2	3	4	5	6	7	8	9	10
	F	G	A	B♭	C	D	E	E♭	F♯	G♯
	Right of Bridges.									
Steel:	1	2	3	4	5	6	7	8	9	10
	F	G	A	B♭	B♮	C♯	D♯	F♯	G♯	B♯
	Left of Bridges.									
	1	2	3	4	5	6	7	8	9	10
	C	D	E	F	G	A	B♭	C	D	E

The additional two notes you name are really of very little value, although there is really no limit as to size of instrument or number of notes. Thirty, however, is, to all intents and purposes, sufficient.—R. F.

Bell Fitting.—CYMRU.—(1) "Practical Electric Bell Fitting," by F. C. Allsopp, 165, Queen Victoria Street, E.C., post free, 3s. 6d. (2) "Gas Fitting," by John Black, published by Crosby Lockwood & Co., price 3s.—T. W.

Coil.—S. S. (*Blackburn*).—If you are a constant reader of WORK, and have kept your back numbers, you will find, all through Vols. II. and III., many useful hints in "Shop" upon making coils; but should you be only a casual reader, let me advise you to obtain, through your newsagent or direct from Messrs. Cassell & Co., Vol. IV., Nos. 160, 164, 166, 170, and 178. In these numbers you will find a good and explicit series of articles by Mr. G. E. Bonney upon making induction coils of various sizes.—J. B.

Steam Return.—P. R. (*Alloa*).—Inquiries for the address of the inventor have been made from engineers in Glasgow and elsewhere, but so far without success. As soon as it is obtained it will be given in this column.—M.

Wheelmefna.—H. V. T. (*Harrogate*).—Any optician will supply this; price, from 7s. 6d. If you have any difficulty, write to W. F. Stanley, Great Turnstile, London, W.C.—A. B.

Steam Engine.—J. G. S. (*South Shields*).—The piston thickness and clearance you show will suit. The steam passages and ports should be about $\frac{3}{8}$ in. by $\frac{1}{8}$ in. in the clear, and the exhaust port $\frac{5}{8}$ in. by $\frac{1}{4}$ in. If you work to your sketch you will not be far out. The diameter of piston and connecting-rods should be $\frac{3}{16}$ in.; slide-rod, $\frac{3}{32}$ in. to $\frac{1}{8}$ in.; crank-pin, $\frac{3}{16}$ in.; shaft, $\frac{3}{8}$ in.; cross-head pin, $\frac{1}{8}$ in.; and eccentric-rod pin, $\frac{3}{32}$ in.—F. C.

Forge Fan.—C. H. S. (*Midsomer Norton*).—To make the fan, fasten four blades, preferably curved backward from the direction of the twin, on a spindle, which is fitted with a small driving pulley and mounted in bearings fixed to the side of the casing. The casing, to which the fan should fit closely, but without touching, is made with openings at central parts of the sides to let the air in, and an outlet running off at a tangent from some part of its circumference. The required speed is obtained by connecting the small driving pulley, by a strap, with a larger pulley on a shaft turned by hand or power. The fan-spindle bearings may be supported by bars extending across the central side openings in the case.—F. C.

Patenting Invention.—C. W. H. (*Wandsworth, S.W.*).—Before anything can be done in the way of creating a property in the invention, it is necessary first to ascertain whether it is of a kind to be registered as a design, or whether it is a subject requiring to be patented as an invention or an improvement. When this has been decided, the next thing to be done is to find out whether it has been registered or patented before, or such a modification of it as would be held to cover it by anticipation. Unless it is novel, useful, and not before known or described as an invention, any patent obtained for it would be held invalid; and the same would be the result if it were an improvement on any existing invention for the purpose. Registration is confined to the shape or configuration of the article registered, whilst a patent covers the object of the invention and the mode of carrying it into effect, as well as modifications of the mode. We should advise C. W. H. to spend a little time at the Patent Office Library (open free daily), where he can examine all the specifications of completed patents which relate to his invention, and where he will meet with every attention and assistance from a skilled and obliging librarian and duly qualified assistants. He thus will be able to find out whether his invention has been anticipated, and, perhaps, be able to decide whether it should be registered or patented.—C. E.

Inventions.—GASPIPE.—This matter is already before us for attention. Watch for announcement in WORK.

Rearer.—HARRY.—You will find full instructions for making rearers and other chicken-rearing appliances in WORK, No. 150, Vol. III. Pleased to hear of your success with incubator.—LEGHORN.

Incubator, Fittings for.—G. M. (*Sunderland*).—Thermometers and other fittings can, as before stated several times in these columns, be obtained from Mr. Stevens, 7, Selhurst Road, South Norwood, London, S.E.—LEGHORN.

Bent Iron Work.—W. J. R. (*Northampton*).—Whiteley, the universal provider, Westbourne Grove, London, will supply you with all materials. Designs for flower vases and lamps have already been given in the present volume containing these papers.

Bent Iron.—BENT IRON.—For materials, try Whiteley, Westbourne Grove, W.

"Escape from Fire."—J. L. W. (*London, W.*).—The competition—a very large one—will be adjudicated upon very shortly.—ED.

Model Engine Making.—REGULAR READER.—Try Pocock's work, obtainable through any bookseller.

Cylinder Plug.—NO NAME (*Liverpool*).—To put a new pivot in a cylinder, knock out the plug with a specially-shaped punch, and fit a fresh one. Upon this turn the new pivot. There is no necessity to take both plugs out to put in one new one. If a cylinder has to be put in the turns, always fill it with shellac. To get this off, place cylinder in a spoon with spirit, and boil over a lamp flame. Only send the 'scape wheel to the material shop, and if it is specially short or long, mention the fact.—F. J. G.

Finger Stains on Oak.—W. B. (*Penzance*).—If the finger stains are from ordinary handling, a very slight rub of fine glass-paper will remove them, or, perhaps, a little linseed oil will do so if the work will allow of oiling; but if W. B. has been sharpening tools, and some of the stained oil from the oilstone—consisting of steel and stone in a fine state of division—has been transferred from his fingers to the work, then scraping and glass-papering is necessary to remove such stains. Always sharpen tools first, and always leave the use of glass-paper until the use of planes, scrapers, etc., has been completely accomplished; then glass-paper will remove stains, if any.—B. A. B.

Manufacturers' Addresses.—FISH GRIMSBY.—You require (1) the address of a manufacturer of papier-mâché.—Try McCallum & Hodson, Summer Row, Birmingham. (2) That of a manufacturer of brass wire of all sizes.—Elliott's Metal Co., Selly Oak, Birmingham. (3) That of a manufacturer of small brass castings.—Go to James Cartland & Son, cabinet builders' and naval brass founders, 64-72, Constitution Hill, Birmingham. (4) That of a firm which works wood with bevelled or beaded edges.—You appear to want what are known as "steam-struck mouldings." Apply to Joseph Sandell & Co., Waterloo Bridge Road, Lambeth, London, S.E., who will supply you with a book showing sections of their mouldings, etc., with prices.—S. W.

Threefold Screen for Scraps.—J. D. McA. (*Manchester*).—If you have not the back numbers of WORK from the beginning, get them, and you will find, scattered throughout them, replies and useful information on almost every question that can arise with regard to such screens. It would be impossible for me to give references to all the places at which information on the subject is to be found, but I may mention pp. 600 and 618, Vol. II. (Nos. 89 and 90). The first has useful hints as to covering and decorating, the second as to the construction of the framework.—M. M.

Flooring Cement and Cost for Cellar.—J.T.J. (*Manchester*).—You say your cellar floor is damp. Does the damp rise from the soil under the floor, or does it come from the ground around the arch or walls of the cellar, which is sometimes the case? If so, the ground must be moved from outside, and concrete filled in, quite 12 in. thick, all over outside walls of cellar; or, if that cannot be done on account of neighbours' property, parish roads, or pathways, the inside may be cemented all over. This costs 15s. per square yard, builders' price. But you must not regard price against health and life, which have plenty of perils that are not so easily counteracted as the air poison of a damp cellar. If the walls are damp-proof, and the fault is due to damp under the bricks of floor—which are, doubtless, saturated with damp air, which may also be foul—take up bricks, and, if the soil is foul, take out 6 in. deep. Break up the bricks into ballast size of walnuts, and lay in and ram hard with mortar not too liquid, only pasty. Now mix to every yard of coarse sand two bushels of grey lime and one bushel of Portland cement to a pasty mass, and lay on by throwing on a shovelful at a time—for, remember, the sand is heavier than the other ingredients, and is apt to settle lowest; you want it fairly distributed all through. Cost depends on prices paid for materials. The builders charge 8s. 6d. a square yard for 6 in. thickness. The mixture of coal ashes, lime, and a little clay is admirable for an outhouse or barn, but a cellar is quite differently aired, lighted, and used. In explanation: Breeze (you mention) is partly burned fine coal from furnaces, and was formerly thrown away, but smiths found it a valuable aid to their work—as in spring making and tempering, it having an equable heat when lighted, and no jets of flame to injure delicate work—so it is in demand from its merits and low price. The paths about furnaces are made of it, and its binding qualities suggested its uses to builders for helping to make cheap floors, as was described in WORK. A barn midsty, or "draw-through" for waggons, has sun and wind always on the floor when the doors are open. The grain is not rough wearing, the barn-shovels are of wood, so that such a floor is admirable. The farmer, wiser than our City road-makers, would not use asphalte or smooth concrete or cement, as his horses would slip on it in hauling in waggons or carts or coming out of the "mow" after treading the barley or oats in the straw down hard—for horses are thus used—till they reach the roof or tie-beams, and then are slid down a gully in the barley- or oat-straw on to the midsty floor. This little bit of rustic lore is as a fillip to set town folks thinking, especially those who work in damp, unhealthy cellars, as mentioned by J. T. J., where farmers would not stall their cattle. The Editor has my address, if further information be needed.—PROFESSIONAL CONCRETER.

III.—QUESTIONS SUBMITTED TO READERS.

*** *The attention and co-operation of readers of* WORK *are invited for this section of "Shop."*

Hand Cleaners.—J. H. B. (*Pendleton*) writes:—"Will some reader of WORK kindly tell me what he uses to keep his hands clean after getting them dirty? I have tried many soaps—Brooke's, pumice-stone, sand, borax, etc.—with plenty of elbow-grease and nail-brush, but none are entirely satisfactory. I have contemplated a solution of caustic soda, but, before taking such extreme measures, should like to try something less severe."

Monogram.—L. F. (*No Address*) writes:—"Will any reader oblige me with a fancy monogram for the letters 'F. A. L.,' suitable for inlaid work?"—[The price of WORK cases for binding is 1s. 3d. Indexes cost 1d. each.]

Wood Worms.—W. J. M. (*Dundalk*) writes:—"Can any reader of WORK inform me how to kill worms in mahogany bookcase, and to preserve wood from further decay?"

Reeds.—R. W. T. (*Newcastle-on-Tyne*) writes:—"I have one and a half octave of pedals, which I once had on a harmonium, with sticks and trackers, and as I hope shortly to buy an American organ, I would like to add these pedals, if an amateur could make reeds (wood); and I am handy at the tools. I would be glad of particulars how to make reeds, say, from C C 8 ft., how to box and arrange beneath pedals, and to conduct wind from chest. If I am asking too much in these particulars, I would be obliged if someone could refer me to a number in WORK or any periodical where I could find the principles laid down."

IV.—QUESTIONS ANSWERED BY CORRESPONDENTS.

Corn Bushels.—H. C. (*Abbey Cottage, Dorchester, Wallingford*) writes:—"I notice, in No. 187, p. 494, of WORK, IRONWORK is wanting handles, etc., for corn bushels. I should be glad to make them for him cheaply and well, if he will communicate with me."

Couch.—M. (*Bishop Auckland*) writes to C. R. (*Nottingham*) (see No. 182, p. 414):—"I send sketch of couch with spindle back. The full length may be

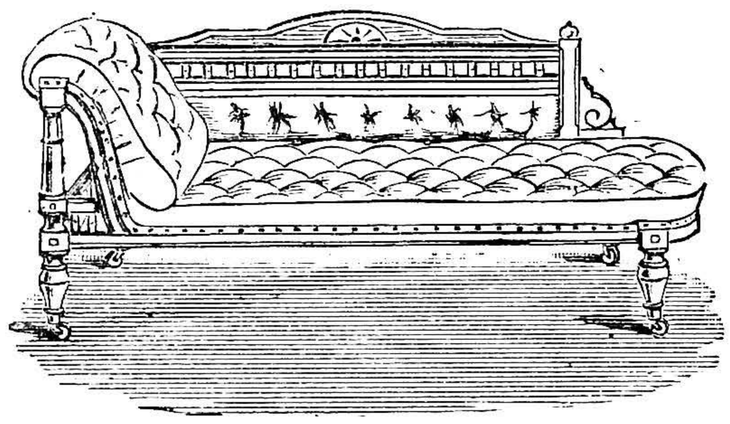

Spindle Back Couch.

6 ft. to 6 ft. 6 in.; width from back to front, 2 ft. 2 in.; height to top of cushion, 1 ft. 4 in.; legs, 2¾ in. square; spindles, ¾ in. diameter."

Hollow Grinding.—F. PIGALL, 4, *Rupert Street, London, W.*, writes, in answer to A. E. B. (*Ashford*) (see No. 189, p. 526):—"We do all our hollow grinding on the premises, and we rarely keep razors more than a day. A corkscrew was made in papier-mâché 3 ft. high, from instructions in the second or third number of WORK, and hung outside my shop as a sign. I had often tried to make the worm or screw part, but was unable to until I saw your paper."

Elementary Carpentry.—C. W. W. (*Southsea*) writes, in reply to WOODSPOILER (see WORK, No. 188, p. 510):—"I beg to recommend him, with every confidence, a little book entitled, 'Handicraft for Handy People' (seventy-five illustrations), by An Amateur Mechanic. Published by M. H. Gill & Son, Dublin; Simpkin, Marshall & Co., London; and John Menzies, Edinburgh. The book was given to me by a friend in Ireland. It is 1s. to national schools; I do not know the price to an ordinary purchaser."

Phonograph.—A. J. R. (*Byfleet*).—Mr. H. Durose, 6, Ruth Street, Leeds, writes to say that he can supply shafts and needles for the above at reasonable cost.

V.—LETTERS RECEIVED.

Questions have been received from the following correspondents, and answers only await space in SHOP, upon which there is great pressure:—IGNORAMUS; COLZA; E. H. (*Wandsworth*); S. M. C. (*Newcastle-on-Tyne*); T. A. W. (*Kilburn*); R. J. (*Guytherin*); LINOLEUM; P. E. S. (*Worcestershire*); DOUBTFUL; G. D. (*Holloway*); BRACKET; STICKFAST; H. B. P. (*Southport*); ALBATROSS; J. W. T. (*New York*); T. G. (*Exeter*); A. J. P. (*Manchester*); F. H. H. (*Galway*); S. H. B. (*Birmingham*); P. B. (*Banff*); J. W. & SON (*Ormskirk*); W. H. K. (*Birmingham*); S. B. (*Bradford*); ARTISAN; ART STUDENT; E. M. (*Leicester*); OLD ENGLAND; S. S. (*London, S.W.*); M. McM. (*Glasgow*); HOT-PLATE; P. L. (*Selly Oak*); J. E. P. (*Birmingham*); A SCULPTOR; T. W. (*Salford*); F. M. (*Carlisle*); R. & W. (*London, E.C.*); J. M. (*London*); T. C. (*Durham*); CONSTANT SUBSCRIBER; J. P. (*Leamington*); G. L., JUNR. (*S. Hackney*); J. B. (*Birkenhead*); W. J. (*Wolverhampton*); A. W. (*Barking*); TINSMITH; C. H. S. (*Coldstream*); AMATEUR; THOS.; HAMLET; G. C. P. (*Cambridge Heath*); A. J. E. (*Mullingar*); MRS. S. S. (*Boston*); H. G. (*Stratford-on-Avon*); W. J. R. S. (*London*).

"WORK" PRIZE SCHEME.

FIFTH COMPETITION.

"Domestic, Commercial, or Scientific Application of Electricity" Competition.

CONTINUING our scheme of Prize Competitions of a useful and practical nature, we propose to devote the present one to the subject of Electricity, in which our readers and the world at large take so keen an interest. We invite competition for the following prizes—

First Prize, £3;
Second Prize, £2;
Third Prize, £1;

for the three best suggestions of an original and practical nature, involving the application of electricity to some domestic, commercial, or scientific use. This application may be on a large or small scale, to take effect on land, sea, or in air—the main conditions being the newness and practical possibilities of the suggestion.

All manuscripts intended for the "Electricity Suggestion" Competition must be addressed to the Editor of WORK, c/o Cassell & Co., Ld., Ludgate Hill, London, E.C. They must reach him on or before Saturday, December 17th, endorsed, "Electricity Suggestion" Competition.

*** For conditions and rules see previous numbers.

Subscribers who can exhibit a WORK *Weekly Contents Bill can have one sent on forwarding name and address to the Publishers.*